# Texas Nonpoint Source Grant Program

## *Texas Bacterial Source Tracking Program for FY 18-19*

### *TSSWCB Project 18-50*

Revision #3

# Quality Assurance Project Plan

# Texas State Soil and Water Conservation Board

Prepared by:

Texas Water Resources Institute

The University of Texas Health Science Center at Houston (UTHealth) School of Public Health in El Paso

Texas A&M AgriLife Research Soil and Aquatic Microbiology Lab

Effective Period: Upon TSSWCB Approval through March 31, 2020

Questions concerning this quality assurance project plan should be directed to:

Lucas Gregory, Ph.D.
Senior Research Scientist and Quality Assurance Officer
Texas Water Resources Institute
2260 TAMU
College Station, Texas 77843-2260
LFGregory@ag.tamu.edu
(979) 845-7869

*This page intentionally left blank*

## Section A1: Approval Sheet

Quality Assurance Project Plan (QAPP) for the *Statewide Bacterial Source Tracking Program for FY 2018-2019.*

**Texas State Soil and Water Conservation Board (TSSWCB)**

Name: Liza Parker
Title: TSSWCB Project Manager (PM)

**Signature:_____Date: _____**

Name: Mitch Conine
Title: TSSWCB Quality Assurance Officer (QAO)

**Signature:_____Date: _____**

**Texas A&M AgriLife Research – Texas Water Resources Institute (TWRI)**

Name: Lucas Gregory, PhD
Title: TWRI Senior Research Scientist & QAO; Project Lead

**Signature:_____Date: _____**

**Texas A&M AgriLife Research - Soil and Aquatic Microbiology Lab (SAML)**

Name: Terry Gentry, PhD
Title: Professor of Soil & Aquatic Microbiology; SAML Director & Project Co-Lead

**Signature:_____Date: _____**

**The University of Texas Health Science Center at Houston (UTHealth) School of Public Health in El Paso (UTSPH-EP)**

Name: Kristina D. Mena, MSPH, PhD
Title: Associate Professor; Interim Regional Dean & UTSPH-EP Project Co-Lead

**Signature:_____Date: _____**

## Section A2: Table of Contents

Section A1: Approval Sheet....3
Section A2: Table of Contents....7
List of Acronyms and Abbreviations....9
Section A3: Distribution List....10
Section A4: Project/Task Organization....11
Figure A4.1 Project Organization Chart....13
Section A5: Problem Definition/Background....14
Section A6: Project/Task Description....16
Table A6.1 Project Plan Milestones....19
Table A6.2 Water Quality Monitoring Stations....20
Section A7: Quality Objectives and Criteria for Data Quality....21
Table A7.1 Data Quality Objectives for Measurement Data....23
Section A8: Special Training Requirements/Certifications....25
Section A9: Documentation and Records....26
Table A9.1 Project Documents and Records....26
Section B1: Sampling Process Design (Experimental Design)....28
Section B2: Sampling Method Requirements....29
Table B2.1 Sample Volume, Container Types, Minimum Sample Volume, Preservation Requirements, and Holding Time Requirements....30
Section B3: Sample Handling and Custody Requirements....31
Section B4: Analytical Method Requirements....32
Table B4.1 Laboratory Analytical Methods....35
Section B5: Quality Control Requirements....36
Section B6: Equipment Testing, Inspection, & Maintenance Requirements....38
Table B6.1 Equipment Inspection and Maintenance Requirements....38
Section B7: Instrument Calibration and Frequency....39
Table B7.1 Instrument Calibration Requirements....39
Section B8: Inspection/Acceptance Requirements for Supplies and Consumables....40
Section B9: Data Acquisition Requirements (Non-direct Measurements)....41
Section B10: Data Management....42
Section C1: Assessments and Response Actions....43
Table C1.1. Assessments and Response Actions....43
Section C2: Reports to Management....44
Section D1: Data Review, Validation, and Verification....45
Section D2: Validation and Verification Methods....46
Table D2.1 Data Review, Verification, and Validation Procedures....47
Section D3: Reconciliation with User Requirements....48
APPENDIX A: Corrective Action Report....50
APPENDIX B: Chain of Custody Record & Sheets of Lading for Fecal Specimen Transport Template....52
APPENDIX C: BST Standard Operating Procedures....55
C-1: Collection of Fecal Samples for Bacterial Source Tracking....56

C-2: Laboratory Protocol for Isolation and Confirmation of *Escherichia coli* from Fecal Specimens .....60
C-3: Cultivation of *E. coli* from Water Samples and Pre-Processing for Isolation and Bacterial Source Tracking .....61
C-4: Archival of *E. coli* Isolates .....65
C-5: DNA fingerprinting of *E. coli* Isolates using enterobacterial repetitive intergenic consensus sequence (ERIC)-PCR .....68
C-6: DNA fingerprinting of *E. coli* Isolates using the DUPONT Riboprinter® system .....73
C-7: Bacterial source tracking (BST) analysis of water samples using *Bacteroidales* PCR .....88
C-8: Preprocessing of water samples for *Bacteroidales* PCR .....94
APPENDIX D: Data Review Checklist & Data Summary Sheet .....96

## List of Acronyms and Abbreviations

| | |
|---|---|
| BMP | best management practice |
| BST | Bacterial source tracking |
| CAR | corrective action report |
| CFU | colony forming unit |
| COC | chain of custody |
| CSU | carbon source utilization |
| $C_T$ | threshold cycle |
| DQO | data quality objectives |
| DNA | Deoxyribonucleic acid |
| ERIC-PCR | Enterobacterial Repetitive Intergenic Consensus-Polymerase Chain Reaction |
| ERIC-RP | ERIC-PCR and RiboPrinting combination method |
| *E. coli* | *Escherichia coli* |
| IRNR | Texas A&M Institute of Renewable Natural Resources |
| KB-ARA | Kirby-Bauer antibiotic resistance analysis |
| MS Excel | Microsoft Excel |
| mRNA | Messenger ribonucleic acid |
| mTEC | membrane thermotolerant *E. coli* |
| MUG | 4-methylumbelliferyl-β-D-glucuronide |
| NA-MUG | nutrient agar with MUG |
| NIST | National Institute of Standards and Technology |
| NPS | nonpoint sources (of pollution) |
| PCR | polymerase chain reaction |
| PM | Project Manager |
| QA | quality assurance |
| QAPP | quality assurance project plan |
| QAO | Quality Assurance Officer |
| QC | quality control |
| QPR | quarterly progress report |
| R&D | Research and Development |
| RPD | Relative percent deviation |
| RP | Riboprinting |
| RSD | relative standard deviation |
| SAML | Texas A&M AgriLife Research- Soil and Aquatic Microbiology Lab |
| SOP | Standard operating procedure |
| spp | species |
| TCEQ | Texas Commission on Environmental Quality |
| TMDL | total maximum daily load |
| TSSWCB | Texas State Soil and Water Conservation Board |
| TWRI | Texas A&M AgriLife Research, Texas Water Resources Institute |
| USEPA | United States Environmental Protection Agency |
| UTSPH-EP | University of Texas School of Public Health, El Paso |
| UV | ultraviolet |
| WPP | Watershed protection plan |

## Section A3: Distribution List

Organizations, and individuals within, which will receive copies of the approved QAPP and any subsequent revisions include:

**Texas State Soil and Water Conservation Board**
**1497 Country View Lane; Temple, Texas 76504**

Name: Liza Parker
Title: TSSWCB PM

Name: Mitch Conine
Title: TSSWCB QAO

**Texas A&M AgriLife Research, Texas Water Resources Institute**
**2260 TAMU; College Station, TX 77843-2260**

Name: Lucas Gregory, PhD
Title: TWRI Senior Research Scientist & QAO; Project Lead

**The University of Texas Health Science Center at Houston (UTHealth) School of Public Health in El Paso**
**5130 Gateway East Blvd., MCA 310, El Paso, TX 79905**

Name: Kristina D. Mena, MSPH, PhD
Title: Associate Professor; Interim Regional Dean & UTSPH-EP Project Co-Lead

**Texas A&M AgriLife Research – Soil and Aquatic Microbiology Lab**
**370 Olsen Blvd, 2474 TAMU, College Station, TX 77843-2474**

Name: Terry Gentry, PhD
Title: Professor of Soil & Aquatic Microbiology; SAML Director & Project Co-Lead

## Section A4: Project/Task Organization

The following is a list of individuals and organizations participating in the project with their specific roles and responsibilities:

**TSSWCB** – Texas State Soil and Water Conservation Board, Temple, Texas. Provides project overview at the State level.

Liza Parker, TSSWCB PM

Responsible for ensuring that the project delivers data of known quality, quantity, and type on schedule to achieve project objectives. Tracks and reviews deliverables to ensure that tasks in the work plan are completed as specified. Reviews and approves QAPP and any amendments or revisions and ensures distribution of approved/revised QAPPs to TSSWCB participants.

Mitch Conine; TSSWCB QAO

Reviews and approves QAPP and any amendments or revisions. Responsible for verifying that the QAPP is followed by project participants. Monitors implementation of corrective actions. Coordinates or conducts audits of field and laboratory systems and procedures. Determines that the project meets the requirements for planning, quality assurance (QA), quality control (QC), and reporting under the Texas Nonpoint Source Program.

**TWRI** – Texas Water Resources Institute, College Station, Texas. Responsible for general project oversight, coordination administration, reporting and development of data quality objectives (DQOs) and a QAPP.

Lucas Gregory, TWRI Senior Research Scientist & QAO; Project Lead

The TWRI Project Lead is responsible for ensuring that tasks and other requirements in the contract are executed on time and with the QA/QC requirements in the system as defined by the contract and in the project QAPP; assessing the quality of subcontractor/participant work; and submitting accurate and timely deliverables to the TSSWCB PM. Responsible for supporting the development and ensuring the timely delivery of project deliverables, ensuring cooperation between project partners, providing fiscal oversight and completing project reporting.

Responsible for determining that the QAPP meets the requirements for planning, QA and QC. Conducts audits of field and laboratory systems and procedures. Responsible for maintaining the official, approved QAPP, as well as conducting quality assurance audits in conjunction with TSSWCB personnel.

**UTSPH-EP** – The University of Texas Health Science Center at Houston (UTHealth) School of Public Health in El Paso, El Paso, Texas. Responsible for bacterial source tracking.

Kristina Mena, Associate Professor; Interim Regional Dean & UTSPH-EP Project Co-Lead
Responsible for performing BST analysis and related activities. This includes ensuring that laboratory personnel involved in generating analytical data have adequate training and thorough knowledge of the QAPP and all SOPs specific to the analyses or task performed. Responsible for oversight of all laboratory operations ensuring that all QA/QC requirements are met, documentation related to the analysis is complete and adequately maintained, and that results are reported accurately. Responsible for ensuring that corrective action is implemented, documented, reported and verified. Monitors implementation of the measures within the laboratory to ensure complete compliance with project DQOs in the QAPP. Conducts in-house audits to ensure compliance with written SOPs and identify potential problems.

**SAML** – Texas A&M AgriLife Research – Soil and Aquatic Microbiology Lab, College Station, Texas. Responsible for bacterial source tracking.

Terry Gentry, Professor. of Soil & Aquatic Micro.; SAML Director & Project Co-Lead
Responsible for performing BST analysis and related activities. This includes ensuring that SAML personnel involved in generating analytical data have adequate training and thorough knowledge of the QAPP and all SOPs specific to the analyses or task performed. Responsible for oversight of all SAML operations ensuring that all QA/QC requirements are met, documentation related to the analysis is complete and adequately maintained, and that results are reported accurately. Responsible for ensuring that corrective action is implemented, documented, reported and verified. Monitors implementation of the measures within SAML to ensure complete compliance with project DQOs in the QAPP. Conducts in-house audits to ensure compliance with written SOPs and identify potential problems.

**Figure A4.1 Project Organization Chart**

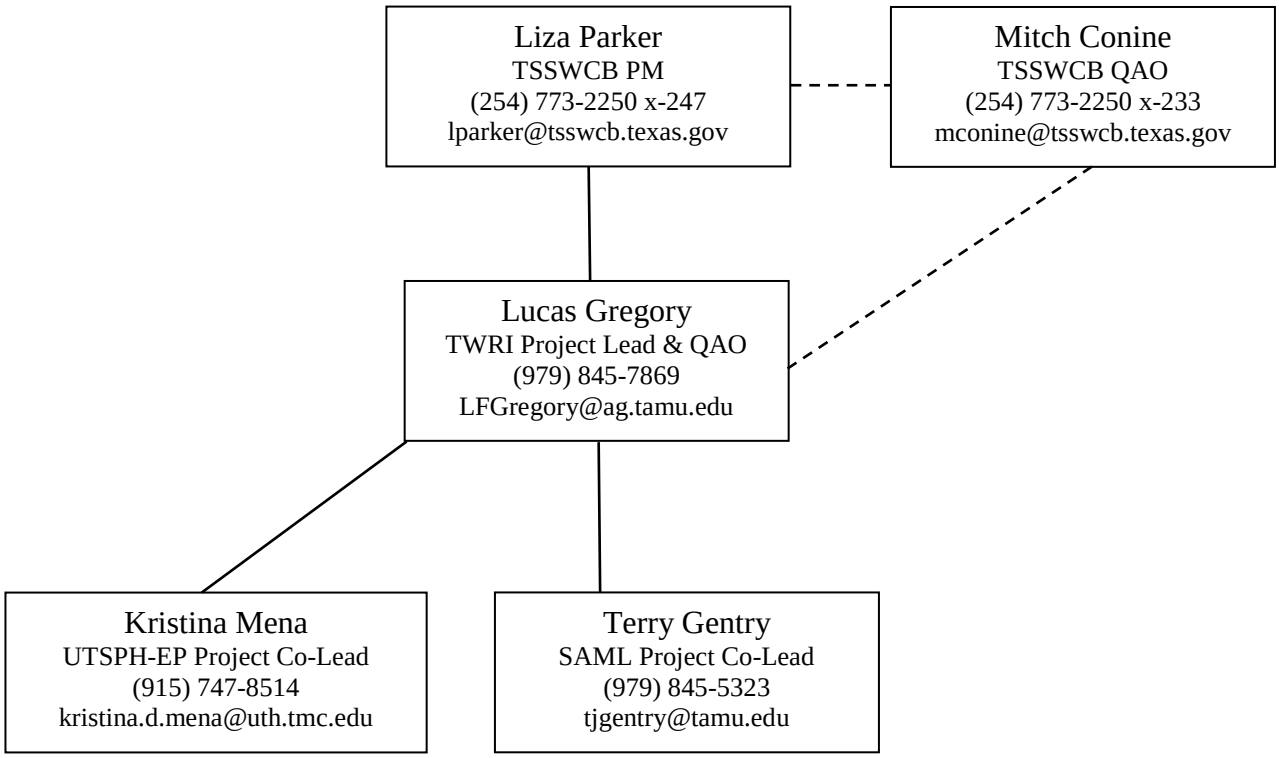

## Section A5: Problem Definition/Background

Bacteria are the number one cause of water quality impairment in Texas. BST is a valuable tool for identifying human and animal sources of fecal pollution to support development of watershed plans, TMDLs, and other strategies for addressing these impairments. Comprehensive BST has been completed by UTSPH EP and AgriLife SCSC in numerous watersheds throughout Texas with support provided by the TSSWCB. As a result of these joint efforts over the last decade, the Texas *E. coli* BST Library (ver. 5-15) currently contains 1,765 *E. coli* isolates obtained from 1,554 different domestic sewage, wildlife, livestock and pet fecal samples. Despite its expansiveness, continued development and refinement of the library to include additional known source isolates from additional Texas watersheds and different animal hosts is needed to further increase its utility. Looking to the future, library independent BST holds much promise. It is already being used to support BST analyses in Texas. However, to improve its ability to address the needs in Texas, further work is needed to develop and evaluate new markers. Finally, continued outreach and technology transfer is needed to expand awareness and understanding of BST, foster dialogue and collaboration, and bring water resource managers up to speed on advances in BST technologies, methodologies, applications and results.

According to the *2014 Texas Integrated Report*, there are 253 impairments due to excessive bacteria. One key to effectively abating these impairments is the identification and assessment of fecal pollution sources. Proper evaluation of these sources is needed to target best management practices and develop bacterial total maximum daily loads (TMDLs) or watershed protection plans (WPPs). This information may also be useful to properly assess risk in contact recreation, as many waterborne pathogens causing human illness do not colonize nonhuman hosts.

Use of genetic and biochemical tests which allow identification of the original host species is referred to as bacterial source tracking (BST). The premise behind BST is that genetic and phenotypic tests can identify bacterial strains that are host specific so that the original host species and source of the fecal contamination can be identified. While there has been some controversy concerning host specificity and survival of *E. coli* in the environment (Gordon, Bauer et al. 2002), this indicator organism has the advantage of being correlated with the presence of fecal contamination and being used for human health risk assessments. Thus, BST of *E. coli* has direct regulatory significance and standardized culturing techniques for water samples available, such as EPA Method 1603 (USEPA 2005).

BST is a valuable tool for identifying sources of fecal pollution. Comprehensive BST has been completed by UTSPH EP and AgriLife SCSC for the following watersheds: (1) Lake Waco and Belton Lake, (2) San Antonio area, (3) Lake Granbury, (4) Buck Creek, (5) Leon and Lampasas Rivers, (6) Little Brazos River tributaries, (7) Big Cypress Creek, (8) Leona River and (9) Attoyac Bayou. A Texas *E. coli* BST Library has been developed based on known source isolates from these and other (i.e. Upper Trinity River and Upper Oyster Creek) watersheds. The Texas *E. coli* BST Library (ver. 5-15) currently contains 1,765 *E. coli* isolates obtained from 1,554 different domestic sewage, wildlife, livestock and pet fecal samples. While this represents a significant step towards development of a statewide *E. coli* BST library, there remains a need for continued expansion of the library to include additional known source isolates from different

Texas watersheds and different animal hosts. As the library is expanded, this will allow continued evaluation of the library for geographical stability and the diversity of source specific isolates to identify specific needs for future expansion and refinement of the library. Further, use of the Texas *E. coli* BST Library provides for significant cost and time savings for the identification of NPS pollution in the development of TMDLs and WPPs.

A Task Force on Bacteria TMDLs, jointly established by TSSWCB and TCEQ in 2006, outlined a strategy to address current and future bacterial TMDLs and Implementation Plans (Jones et al. 2009). The Task Force recommended using library-independent methods such as *Bacteroidales* PCR for preliminary qualitative analyses and library-dependent methods (e.g., ERIC-PCR and RP) if more quantitative data are required. Continued support of established BST analytical infrastructure, further development and evaluation of the Texas *E. coli* BST Library, and selection and assessment of additional library-independent BST markers will help achieve these Task Force recommendations.

Lastly, the state of BST science, methodologies, application and confidence continues to evolve. Continued outreach and technology transfer is needed to foster dialogue and collaboration and bring water resource managers up to speed on advances in BST technologies, methodologies, applications and results.

## Section A6: Project/Task Description

Due to the current BST projects and growing interest in BST among state agencies, river authorities, and stakeholder groups across Texas, the statewide BST analytical infrastructure needs to be maintained and advanced appropriately. This not only includes the needed maintenance and repairs of analytical equipment; but also the continued support, training, and retention of skilled personnel. With recent personnel changes at UTSPH EP and TWRI, there is also a near-term need for increased interaction among laboratories to facilitate the transition. To meet the needs of the State, BST analytical capabilities will be maintained at both UTSPH EP and AgriLife SCSC BST laboratories. Financial support will be used to maintain lab personnel at UTSPH EP and AgriLife SCSC, continue refinement and evaluation of the Texas *E. coli* BST library, continue work on marker development and evaluation, and support targeted BST analyses for the Aransas River and Mission River watersheds.

Template-SOPs will be reviewed and updated accordingly to ensure that they are current and up to date with applicable methods, technologies and markers. UTSPH EP and AgriLife SCSC will collaborate to evaluate and refine the Texas *E. coli* BST library. Fingerprint diversity of source-specific *E. coli* isolates will be investigated to help evaluate the strain representativeness of the library. This will allow the project team to identify specific needs for the expansion and refinement of the library. To support library expansion and BST analyses in the Aransas River and Mission River watersheds, approximately 50 known source fecal samples from targeted animal sources will be collected by TWRI and analyzed for *E. coli*. TWRI will collect a total of 24 water samples (12 samples from each of 2 sites) in the Aransas and Mission River watersheds to evaluate using BST analysis. The samples will be transported to SAML for initial processing, and subsequent BST analysis. UTSPH EP will complete BST analysis on samples from one site while SAML will complete analysis on the other. The goal is to isolate 10 *E. coli* colonies from each water sample for DNA fingerprinting.

As funding allows, AgriLife SCSC and UTSPH EP will continue work to evaluate and further develop/refine source-specific bacterial PCR markers. Specifically, efforts will be made to evaluate the addition of library-independent markers to the Texas BST toolbox. Further, TWRI, AgriLife SCSC and UTSPH EP will cooperate with other entities nationwide to ensure that the most up-to-date and accurate BST approaches are implemented in Texas. Library-independent markers continue to be developed and validated. To-date our use of these markers for watershed characterization has primarily been on a presence/absence basis. Recent work in our labs has indicated that multiple markers have potential for quantitative detection of bacteria from different sources. Quantitative detection of markers will allow relative ranking of sources and also provide information needed for potentially linking BST results with Quantitative Microbial Risk Assessment (QMRA) efforts. We plan to continue evaluation of library-independent markers and examine the potential for use of digital PCR (dPCR) to improve quantitative detection. dPCR has the potential to enhance detection by reducing issues with PCR inhibition which are commonly encountered with environmental samples and also increasing the accuracy of detection by eliminating the need for relative calibration using standard curves.

Finally, delivering educational and informational programming regarding BST continues to be a critical need. To this end, TWRI will continue to host and maintain the BST website

(http://texasbst.tamu.edu/). The website will be used to disseminate educational materials, project updates, science updates, and other outreach efforts to advance the science and application of BST in Texas and nationally. To provide greater outreach to water resource managers in Texas, the project team will promote the use of and provide resources on BST. As needed to support this, TWRI, UTSPH EP, and AgriLife SCSC will develop additional flyers, one-pagers, tri-folds or other appropriate printed media to 1) discuss the appropriate application of BST in identifying fecal contamination sources and 2) promote the analytical laboratory capability of public BST labs which the State has invested. As appropriate, TWRI will also include information about BST in its publications. Additionally, TWRI, UTSPH EP, and AgriLife SCSC will periodically meet with natural resource agencies to advance the general knowledge and understanding of agency staff on the use of BST in Texas.

**General Project Description**

The goal of this project is to support BST analyses across the State through (1) continued personnel support and operation and maintenance of analytical infrastructure at public BST laboratories; (2) continued development, updating and implementation of statewide BST template-SOPs for ERIC-PCR, RiboPrinting, and *Bacteroidales* PCR along with coordination amongst other entities conducting BST in the state to standardize methodologies employed; (3) delivery of information and materials that give an overview of BST activities in Texas to date and describe the use, capabilities and applicability of BST and the services provided by the State-supported analytical labs to local, state and national stakeholder audiences; (4) continued BST analysis and development of the Texas *E. coli* BST Library by adding known source isolates to the existing library and by evaluating its temporal and geographic stability, composition, accuracy, and diversity; (5) further development of suitable source-specific bacteria markers for library independent BST; and (6) targeted BST.

**Maintenance of Analytical Infrastructure**

Due to the current and anticipated need for BST studies in Texas, statewide BST analytical infrastructure needs to be maintained appropriately. This not only includes the needed maintenance and repairs of analytical equipment; but also the continued support, training, and retention of skilled personnel. To meet the needs of the State, BST analytical capabilities will be maintained at both UTSPH EP and AgriLife SCSC BST laboratories. Financial support will be used to retain and train lab personnel at UTSPH EP and AgriLife SCSC, continue refinement and evaluation of the Texas *E. coli* BST library, continue work on marker development and evaluation, and support targeted BST analysis for watershed plans as directed by the TSSWCB.

**Continued Development and Implementation of Statewide BST Template-SOPs**

While previous studies have utilized appropriate QA and QC mechanisms as identified in project-specific QAPPs, the volume of current and anticipated BST studies across the State favors the development and implementation of BST template-SOPs. BST template-SOPs developed under TSSWCB projects 08-50 and 08-51 have provided for the continued development and use of the Texas *E. coli* BST Library by multiple laboratories and will also

support and improve inter-laboratory comparison of BST results. In this project, ERIC-PCR, RP and *Bacteroidales* PCR template-SOPs will be reviewed and updated accordingly to ensure that they are current and up to date with applicable methods, technologies and markers.

**Refine and Expand the Texas *E. coli* BST Library**

The Texas *E. coli* BST Library is dynamic, with new isolates being added with each successive BST project. Under this project, UTSPH EP and AgriLife SCSC will collaborate to evaluate and refine the Texas *E. coli* BST Library through data exploration and analysis of geographical and temporal stability, composition, average rates of correct classification (accuracy), diversity of source specific isolates, and further development and refinement needs of the Texas *E. coli* BST library, as the library is updated with new known-source isolates. Additional known source fecal isolates collected in the Mission and Aransas River watersheds will be added to the Texas *E. coli* BST Library and water samples will be evaluated to determine bacterial contributors in support of watershed protection efforts in these watersheds.

TWRI will be responsible for the collection and transport of all water quality data and samples to SAML within appropriate sample holding times and in accordance with this QAPP. Sampling will be conducted routinely at the sampling sites designated in Table A6-2.

For *E. coli* enumeration and BST analysis purposes, the SAML will receive water samples and process them for *E. coli* isolation. The lab will also process water samples for *Bacteroidales* PCR analysis. *E. coli* will be isolated from the samples using standard microbiological methods as previously used in TSSWCB and TCEQ BST projects. *E. coli* will be isolated from water samples using USEPA Method 1603 and modified membrane Thermotolerant *E. coli* (mTEC) medium. The use of modified mTEC medium for isolation of *E. coli* from water will help avoid selection of different types of *E. coli* due to different media. Inoculated plates will be incubated at 35±0.5$^{o}$C for 2 hours to resuscitate stressed bacteria, then incubated at 44.5±0.2$^{o}$C for approximately 20 to 24 hours. The modified mTEC method is a single-step method that uses one medium and does not require testing using any other substrate. The modified medium contains the chromogen 5-bromo-6-chloro-3-indolyl-β-D-glucuronide (Magenta Gluc), which is catabolized to glucuronic acid (a red/magenta-colored compound) by *E. coli* that produces the enzyme β-D-glucuronidase. This enzyme is the same enzyme tested for using other substrates such as the fluorogenic reaction with 4-methylumbelliferyl-β-D-glucuronide (MUG) observed by ultraviolet light fluorescence.

**Methods Development**

As funding allows, AgriLife SCSC and UTSPH EP will continue work to evaluate and further develop/refine source-specific bacterial PCR markers. Specifically, efforts will be made to evaluate the addition of library-independent markers to the Texas BST toolbox. Further, TWRI, AgriLife SCSC and UTSPH EP will cooperate with other entities nationwide to ensure that the most up-to-date and accurate BST approaches are implemented in Texas. Library-independent markers continue to be developed and validated. To-date our use of these markers for watershed characterization has primarily been on a presence/absence basis. Recent work in our labs has indicated that multiple markers have potential for quantitative detection of bacteria from

different sources. Quantitative detection of markers will allow relative ranking of sources and also provide information needed for potentially linking BST results with Quantitative Microbial Risk Assessment (QMRA) efforts. We plan to continue evaluation of library-independent markers and examine the potential for use of digital PCR (dPCR) to improve quantitative detection. dPCR has the potential to enhance detection by reducing issues with PCR inhibition which are commonly encountered with environmental samples and also increasing the accuracy of detection by eliminating the need for relative calibration using standard curves.

**Outreach on Bacterial Source Tracking and BMPs**

Finally, delivering educational and informational programming regarding BST continues to be a critical need. To this end, TWRI will continue to host and maintain the BST website (http://texasbst.tamu.edu/). The website will be used to disseminate educational materials, project updates, science updates, and other outreach efforts to advance the science and application of BST in Texas and nationally. To provide greater outreach to water resource managers in Texas, the project team will promote the use of and provide resources on BST by participating in meetings, conferences, workshops, seminars, and other appropriate venues. As needed to support this, TWRI, UTSPH EP, and AgriLife SCSC will develop additional flyers, one-pagers, tri-folds or other appropriate printed media to 1) discuss the appropriate application of BST in identifying fecal contamination sources and 2) promote the analytical laboratory capability of public BST labs which the State has invested. As appropriate, TWRI will also include information about BST in its publications. Additionally, TWRI, UTSPH EP, and AgriLife SCSC will periodically meet with natural resource agencies to advance the general knowledge and understanding of agency staff on BST and to develop action strategies to address issues raised by agency staff regarding the use of BST in Texas.

**Table A6.1 Project Plan Milestones**

| Task | Project Milestones | Agency | Start | End |
|---|---|---|---|---|
| 2.1 | Develop QAPP | TWRI, UTSPH-EP, SAML | 1/18 | 4/18 |
| 2.2 | Submit revisions/amendments to QAPP | TWRI | 4/18 | 3/20 |
| 2.3 | Updated SOPs for collection of fecal samples for BST, isolation of *E. coli*, archival of *E. coli* isolates, ERIC-PCR, RP, pre-processing of water samples for *Bacteroidales* PCR, and *Bacteroidales* | SAML, UTSPH-EP | 1/18 | 3/20 |
| 3.1 | Continued operation and maintenance of BST analytical equipment and support of personnel needs to sustain operating capability and expand the utilization of BST applications statewide. | SAML, UTSPH-EP | 1/18 | 3/20 |
| 3.2 | Retain or hire needed lab staff to advance Texas BST capabilities | SAML, UTSPH-EP | 1/18 | 3/20 |
| 3.3 | Perform targeted BST analysis to support the watershed planning efforts in the Aransas River watershed | UTSPH-EP, TWRI | 4/18 | 3/20 |

| | | | | |
|---|---|---|---|---|
| 3.4 | Perform targeted BST analysis to support TMDL implementation efforts in the Mission River watershed | SAML | 4/18 | 3/20 |
| 4.1 | Develop a targeted list of needed species for fecal sample collection and plan for their collection and delivery | TWRI, UTSPH-EP, SAML | 2/18 | 4/18 |
| 4.2 | Collect 25 fecal samples each from the Aransas and Mission River watersheds | TWRI | 4/18 | 4/19 |
| 5.1 | Isolate *E. coli* from the approximately 50 known source fecal samples | SAML, UTSPH-EP | 4/18 | 12/19 |
| 5.2 | Evaluate the geographical and temporal stability, composition, average rates of correct classification (accuracy), diversity of source specific isolates, and further development and refinement needs of the Texas *E. coli* BST library | SAML, UTSPH-EP | 4/18 | 3/20 |
| 5.3 | As funding allows, utilize the best available bacterial indicators to evaluate and further develop/refine source-specific bacterial PCR markers using known source fecal material | UTSPH-EP, SAML, | 4/18 | 3/20 |
| 6.1 | Host and maintain project website | TWRI | 1/18 | 3/20 |
| 6.2 | Promote use of and provide resources on BST | TWRI, UTSPH-EP, SAML | 1/18 | 3/20 |

## Table A6.2 Water Quality Monitoring Stations

| Routine Monitoring Sites | | | | | | |
|---|---|---|---|---|---|---|
| **TCEQ Station ID** | **Site Description (TCEQ Short Description)** | **Latitude Longitude** | **Sample Matrix** | **Monitoring Frequencies (per year)** | | |
| | | | | **Lab*** | **Field*** | **Sample Type** |
| 12947 | Aransas River Tidal at Boat Ramp at FM 629 Terminus South of Bonnie View | 28.122231<br>-97.309856 | water | 12 | 12 | Routine |
| 12943 | Mission River Tidal Near South Bank Downstream of FM 2678 Bridge Between Refugio and Bayside | 28.184238<br>-97.213370 | water | 12 | 12 | Routine |

## Section A7: Quality Objectives and Criteria for Data Quality

The objective of this section is to ensure that data collected meets the data quality objectives (DQOs) of the project. The current project has a significant focus on conducting BST analytical procedures to support watershed planning in the Aransas River watershed and TMDL implementation efforts in the Mission River watershed. Project objectives include the continued development, updating and implementation of statewide BST template-SOPs for ERIC-PCR, RiboPrinting, and *Bacteroidales* PCR to standardize methodologies employed; evaluating the temporal and spatial stability of the Texas *E. coli* BST Library and diversity of source specific, cosmopolitan, transient, and naturalized *E. coli* isolates as the library is expanded; continued development and evaluation of new source-specific bacterial markers for library independent BST; expansion of the Texas *E. coli* BST Library through the collection of additional known source samples of *E. coli;* and conducting BST analysis in support of watershed planning in the Aransas River watershed and TMDL implementation efforts in the Mission River watershed. Sampling conducted in conjunction with this project is primarily associated with collection of known source fecal samples for assessment and use in expanding the Texas *E. coli* BST Library. Water sampling associated with BST analysis in Aransas and Mission River watersheds will be done in conjunction with other projects. Sampling will be conducted consistent with the most recent version of TCEQ's *Surface Water Quality Monitoring Procedures, Volume 1: Physical and Chemical Monitoring Methods* (TCEQ 2012b). Routine grab samples will be collected on monthly basis. Only non-regulatory water grab samples will be collected under this project.

Water samples collected will be transported to SAML for bacteria enumeration and BST analysis. TWRI will deliver water samples to SAML within designated holding times for analysis. Methods outlined in Tables A7-1 and B2-1 will be employed. Appropriate DQOs, performance criteria, and QA/QC requirements for this analysis are also reported in Tables A7-1 and B2-1.

### Precision

Precision of laboratory data is a measure of the reproducibility of a result from repeated analyses. It is strictly defined as a measure of the closeness with which multiple analyses of a given sample agree with each other. For quantitative microbiological analyses, the method to be used for calculating precision is the one outlined in *Standard Methods for the Examination of Water and Wastewater*, 21st Edition, section 9020 B.8.b.

$$RPD_{bacteria} = (\log X_1 - \log X_2)$$

Relative percent deviation (RPD) $_{bacteria}$ should be lower than 3.27 ΣRlog/n, where Rlog is the difference in the natural log of duplicates for the first 15 positive samples. RiboPrinting and ERIC-PCR BST are qualitative assays, generating two different types of DNA fingerprints. The precision of the ERIC-PCR and RiboPrinting can be measured as the percent of *E. coli* isolates that, when typed multiple times, produce the same ultimate source result in terms of the source identified. Precision for ERIC-PCR and RiboPrinting will be determined using a laboratory control strain of *E. coli* (QC101). For ERIC-PCR and RiboPrinting, the data quality objective is 90% precision. *Bacteroidales* PCR and *E. coli* library-independent PCR based on ERIC-PCR DNA sequences are

also currently presence-absence qualitative assays. Precision is determined using fecal DNA or *E. coli* isolate DNA from known human and animal sources with a data quality objective of 100% agreement in marker detection among replicates.

## Table A7.1 Data Quality Objectives for Measurement Data

| Parameter | Units | Method Type | Method | Method Description | Parameter Code | AWRL[1] | Precision of Laboratory Duplicates | Accuracy[2] | Percent Complete[3] |
|---|---|---|---|---|---|---|---|---|---|
| *E. coli* in water, isolation, mTEC | cfu/100 mL | Membrane Filter culture on modified mTEC agar | USEPA 1603 | Membrane Filter | NA | 1 cfu | NA | NA | 90 |
| *E. coli* RiboPrint fingerprint | NA | DNA/ image matching | UTSPH-EP SOP | RiboPrinting | NA | NA | 90% identical[4] | 90% correct[4] | 90 |
| *E. coli* ERIC-PCR fingerprint | NA | DNA/ image matching | UTSPH-EP SOP | ERIC-PCR | NA | NA | 90% identical[4] | 90% correct[4] | 90 |
| *Bacteroidales* PCR | Qualitative marker | PCR presence or absence | UTSPH-EP SOP | *Bacteroidales* PCR | NA | NA | 100% agreement for presence/ absence detection of markers | 90% correct (presence/ absence) | 90 |
| *E. coli* library-independent PCR markers based on ERIC-PCR DNA sequences | Qualitative marker | PCR presence or absence | UTSPH-EP SOP | *E. coli* PCR | NA | NA | 100% agreement for presence/ absence detection of markers | 90% correct (presence/ absence) | 90 |
| *E. coli* in fecal matter; isolation, mTEC | cfu/g wet weight | Membrane Filter culture on modified mTEC agar | USEPA 1603 (2006); Byappanahalli et al. (2003) | Membrane Filter | NA | 1 cfu | 3.27*ΣRlog/n | NA | 90 |

[1] minimum detection limits for field parameters represent manufacturer specifications and will be used for the AWRL in this instance.
[2] Manufacturer specifications are presented for accuracy limits and method detection limits for field parameters.
[3] The objective is for 90% of the data to be collected.
[4] Accuracy and laboratory method precision for BST will be determined using an *E. coli* QC isolate and DNA from known-source samples
[5] Based on a range statistic as described in Standard Methods, 20th Edition, Section 9020-B, Quality Assurance/Quality Control -Intralaboratory Quality Control Guidelines. This criterion applies to bacteriological duplicates with concentrations >10 MPN/100mL or >10 organisms/100mL.

**Representativeness**
One of the subtasks of this project is to expand the Texas *E. coli* BST Library so it is more representative of the *E. coli* isolates found in known source samples throughout Texas watersheds. The ability to reach this goal is tempered by the availability of time and funding. To maximize resources, only one fecal sample per animal will be collected. Samples will be collected from animals in different locations throughout the Aransas River and Mission River watersheds and immediately adjacent areas as needed. In addition, for ERIC-RP, ERIC-PCR is first used to identify clonal (identical) *E. coli* isolates from each fecal sample to ensure appropriate representation of isolates selected for the library.

**Accuracy**
Accuracy is a statistical measurement of correctness and includes components of systemic error. A measurement is considered accurate when the result reported does not differ from the true situation. Performance limits for all measured parameters are specified in Table A7.1.

Accuracy for BST methods will be assessed using the *E. coli* (QC101) lab control strain for ERIC-RP and fecal DNA or *E. coli* isolate DNA from known human and animal sources for *Bacteroidales* PCR, and *E. coli* library-independent PCR. For the ERIC-RP, the data quality objective is 90% accuracy for correct identification to library strain. For *Bacteroidales* PCR and *E. coli* library-independent PCR the data quality objective is 90% accuracy for the presence/absence of the appropriate markers in control DNA samples. An additional element of accuracy is the absence of contamination. This is determined through the analysis of no template controls for the PCR methods.

**Comparability**
The comparability of the data produced is predetermined by the commitment of the staff to use only approved procedures as described in this QAPP. Comparability is also guaranteed by reporting all ambient, library, and QC data for evaluation by others.

**Completeness**
The completeness of the data is a measure of how much of the data is available for use compared to the total potential data. Ideally, 100% of the data should be available. However, the possibility of unavailable data due to accidents, weather, insufficient sample volume, broken or lost samples, etc. is to be expected. Therefore, it will be a general goal of the project(s) that 90 percent data completion is achieved.

## Section A8: Special Training Requirements/Certifications

All personnel involved in sampling, sample analyses, and statistical analyses have received the appropriate education and training required to adequately perform their duties. No special certifications are required. Personnel involved in this project have been trained in the appropriate use of field equipment, laboratory equipment, laboratory safety, cryogenics safety, and all applicable SOPs. One of the objectives of this project is the continued support, training, and retention of skilled personnel. To meet the needs of the State, BST analytical capabilities will be maintained at both UTSPH-EP and SAML BST laboratories. Training needs for each individual laboratory's personnel will be coordinated to ensure appropriate technology transfer and comparability of BST data. Finally, SAML is accredited by The NELAC Institute (TNI) for enumerating *E. coli* in both non-potable and drinking water using U.S. Environmental Protection Agency (USEPA) Method 1603.

## Section A9: Documentation and Records

Copies of general maintenance records, all field data sheets, COC forms, laboratory data entry sheets, calibration logs, and corrective action reports (CARs) will be archived by each laboratory as outlined in Table A9.1. In addition, UTSPH-EP and SAML will archive electronic forms of all project data for at least five years. All electronic data are backed up on an external hard drive monthly, compact disks weekly, and is simultaneously saved in an external network folder and the computer's hard drive. A blank CAR form is presented in Appendix A and a blank Chain of Custody (COC) record and Sheets of Lading for Fecal Specimen Transport are presented in Appendix B.

Quarterly Progress Reports (QPRs) will note items or areas identified as potential problems and any variations or supplements to the QAPP. CARs will be utilized when necessary. CARs that result in any changes or variations from the QAPP will be made known to pertinent project personnel and documented in an update or amendment to the QAPP. All QPRs and QAPP revisions will be distributed to personnel listed in Section A3.

**Table A9.1 Project Documents and Records**

| Document/Record | Location | Retention | Form |
|---|---|---|---|
| QAPP, amendments, and appendices | TWRI | 5 years | Paper/Electronic |
| Chain of custody records | SAML/UTSPH | 2 years | Paper/Electronic |
| Sheets of Lading for Fecal Specimens | SAML/UTSPH | 2 years | Paper/Electronic |
| Corrective action reports | TWRI | 2 years | Paper/Electronic |
| Field notes | TWRI | 2 years | Paper/Electronic |
| Bacteriological data sheet | SAML/UTSPH | 2 years | Paper/Electronic |
| Laboratory QA manuals and/or SOPs | SAML/UTSPH | 5 years | Paper/Electronic |
| Lab equipment calibration records & maintenance logs | SAML/UTSPH | 2 years | Paper/Electronic |
| Lab data reports/results | SAML/UTSPH | 5 years | Paper/Electronic |
| Quarterly progress reports/final report/data | TWRI | 5 years | Paper/Electronic |

The TSSWCB may elect to take possession of records at the conclusion of the specified retention period.

### QAPP Revision and Amendments

Until the work described is completed, this QAPP shall be revised as necessary and reissued annually on the anniversary date, or revised and reissued within 120 days of significant changes, whichever is sooner. The last approved versions of QAPPs shall remain in effect until revised versions have been fully approved; the revision must be submitted to the TSSWCB for approval before the last approved version has expired. If the entire QAPP is current, valid, and accurately reflects the project goals and the organization's policy, the annual re-issuance may be done by a certification that the plan is current. This will be accomplished by submitting a cover letter station the status of the QAPP and a copy of new, signed approval pages for the QAPP.

QAPP amendments may be necessary to reflect changes in project organization, tasks, schedules, objectives and methods; address deficiencies and non-conformances; improve operational efficiency; and/or accommodate unique or unanticipated circumstances; Written requests for amendments are directed from the TWRI Project Leader or designee to the TSSWCB PM and are effective immediately upon approval by the TSSWCB PM and QAO. Amendments to the QAPP and the reasons for the changes will be documented and distributed to all individuals on the QAPP distribution list by the TWRI Project Leader or designee. Amendments shall be reviewed, approved, and incorporated into a revised QAPP during the annual revision process.

## Section B1: Sampling Process Design (Experimental Design)

Sampling to be conducted in conjunction with this project is associated with supporting the expansion of the Texas *E. coli* BST Library through the collection of known sources of fecal matter from the Aransas and Mission River watersheds. The primary sampling design approach is to collect 25 fecal samples from each watershed comprised of targeted species that will be determined by SCSC, UTSPH EP and TWRI, cooperatively. If a source category is underrepresented in that project's data set, additional fecal samples may be collected by TWRI to fill gaps in the available known sources of fecal material. Sampling will focus on specific species or classes (e.g. avian wildlife) and will be conducted where possible. No specific geographic locations will be specified for these samples to be collected from.

Water samples processed under this project will be collected as grab samples and delivered to the SAML for *E. coli* enumeration and isolation, following the USEPA Method 1603. A total of 24 samples will be collected on a monthly basis for a 1 year period, 12 at each site for the Aransas and Mission River Watersheds. Grab samples will be delivered on ice within the 24 hour hold time and initially processed by SAML. The samples will then be divided between SAML and UTSPH EP for further isolate and BST analysis.

## Section B2: Sampling Method Requirements

### Fecal Sample Collection

All collection and handling of fecal specimens conducted by TWRI will be performed using all safety precautions (i.e.: wearing protective gear) and will be strictly enforced. Specimens will be handled aseptically to ensure sample quality and minimize exposure of personnel to pathogens. All fecal material and waste collected will be placed in screw capped sterile containers (Table B2.1). Containers will be labeled with: Name of collector, date, and species before collection. Fecal specimens will be placed in an insulated cooler and transported to the SAML Lab in College Station. 30 grams of fecal material is the goal weight of feces to be collected from each animal. Should 30 grams not be achievable due to animal size or other factors, as much fecal matter as possible will be collected. At least 0.1 grams of feces must be collected to be useful for *E. coli* enumeration and isolation.

Fecal sample collections are described in Appendix C-1. To ensure fresh samples of known origin, fecal samples will be obtained using one of three methods: a) collected from animals visually observed defecating by technician; b) collected from cages of trapped animals; c) collected from intestines of animals. All fecal samples will be delivered to SAML for isolation within 24 hours of receipt in the lab. Once isolated, a portion of the isolates will be shipped to UTSPH EP for BST processing.

### Water Sample Collection

TWRI will follow the most recent versions of the field sampling procedures documented in the TCEQ (2102b). Water samples will be collected directly from the stream (midway in the stream channel) in most cases. Water samples used for *E. coli* analysis will be collected in sterile 200 mL Whirl-Pak bags. All sample containers will be labeled with the following information:

- collection date
- collection time
- sample location
- and sampler's initials

Care will be exercised to avoid the surface microlayer of water, which may be enriched with bacteria and not representative of the water column. All samples will be transported in a container with ice to the laboratory for analysis.

## Documentation of Field Sampling Activities

### Recording Data

For the purposes of this section and subsequent sections, all field and laboratory personnel follow the basic rules for recording information as documented below:

- Legible writing with no modifications, write-overs or cross-outs;
- Correction of errors with a single line followed by an initial and date;

- Close-outs on incomplete pages with an initialed and dated diagonal line.

Each fecal sample will be collected aseptically in a new, sterile fecal tube (Sarstedt, cat# 80.734.311) or a new, sterile Whirl-Pak® bag as appropriate. Specimen sample containers will be labeled with:

a. Sampling date
b. Sampling time
c. Animal species
d. Sample location (e.g., global position system coordinates [preferred] or town, city, and/or county)
e. Sample collector's name, initials
f. Any other pertinent information, e.g., sex of animal; juvenile or adult

All the sample information will be logged into a field log. Samples should be refrigerated (~4°C) or kept on ice following collection and shipped to the designated laboratory on ice within 3 days of collection. See SOP in Appendix C for complete protocol.

**Table B2.1 Sample Volume, Container Types, Minimum Sample Volume, Preservation Requirements, and Holding Time Requirements.**

| Parameter | Matrix | Container | Preservation | Temperature | Sample Volume | Holding Time |
|---|---|---|---|---|---|---|
| Fecal Specimen | Feces | Sterile fecal sample tube | None | 4°C | 30g[1] | 72 hours |
| *E. coli*, mTEC | Water | Sterile Whirl-Pak Bag | Ice | ≤4°C | 150 mL | 24 hours |

[1] 30 grams is the goal weight for fecal matter collection; however, should it not be possible to collect 30 grams of feces, as much material as possible will be collected. 0.1 grams is the minimum allowable weight of fecal material to be collected

Safety is an issue when working with fecal samples due to the bacterial concentration. Hazardous material safety handling instructions will be included in a file for the driver to carry that will be visible on seat or dash of vehicle in case of accident or being stopped by law enforcement officers. Biohazard signs will be placed on the cooler containing samples collected for transport. Sheets of Lading (Appendix B) will be on hand with the field technician and completed for each fecal sample collected along with a COC form.

## Section B3: Sample Handling and Custody Requirements

### Chain-of-Custody

Proper sample handling and custody procedures ensure the custody and integrity of samples beginning at the time of sampling and continuing through transport, sample receipt, preparation, and analysis. The COC form is used to document sample handling during transfer from the field to the laboratory and inter-laboratory. The sample number, location, date, changes in possession and other pertinent data will be recorded in indelible ink on the COC. The sample collector will sign the COC and transport it with the sample to the laboratory. At the laboratory, samples are inventoried against the accompanying COC. Any discrepancies will be noted at that time and the COC will be signed for acceptance of custody. Sample numbers will then be recorded into a laboratory sample log, where the laboratory staff member who receives the sample will sign it. A copy of a blank COC form used on this project is included as Appendix B.

### Sample Labeling

Samples will be labeled on the container with an indelible, waterproof marker. Label information will include site identification, date, sampler's initials, and time of sampling. The COC form will accompany all sets of sample containers.

### Sample Handling

Following collection, samples will be placed on ice in an insulated cooler for transport to the laboratory. At the laboratory, samples will be placed in a refrigerated cooler dedicated to sample storage. The Laboratory Supervisor has the responsibility to ensure that holding times are met with fecal samples. The holding time is documented on the COC. Any problem will be documented with a CAR.

### Failures in Chain-of-Custody and Corrective Action

All failures associated with COC procedures are to be immediately reported to the TSSWCB PM. Failures include such items as delays in transfer, resulting in holding time violations; violations of sample preservation requirements; incomplete documentation, including signatures; possible tampering of samples; broken or spilled samples, etc. The Project Leader and the TSSWCB PM/QAO will determine if the procedural violation may have compromised the validity of the resulting data. Any failure that potentially compromises data validity will invalidate data, and the sampling event should be repeated. CARs will be reported to the TSSWCB in the QPR. The CARs will be maintained by the TWRI Project Lead.

## Section B4: Analytical Method Requirements

### *BST Analysis*

The analytical methods utilized in BST analysis and sample preparation are listed in Table B4.1 and Table A7.1 and described in detail in Appendix C. All laboratory sampling areas and equipment will be sterilized with at least one or in any combination of the following methods: ethyl alcohol, bleach, UV light, or autoclave. All disposables will be placed in a heat-resistant biohazard bag and autoclaved prior to disposal.

Fecal samples collected by TWRI will be delivered to SAML and processed using modified mTEC agar, USEPA Method 1603 [EPA-821-R-06-011. July 2006. *Escherichia coli* in Water by Membrane Filtration Using Modified Membrane-Thermotolerant *Escherichia coli* (modified m-TEC) Agar]. Modified mTEC medium is used in USEPA Method 1603 for water samples. Its use for source samples helps avoid selection of different types of *E. coli* due to different media. The modified medium contains the chromogen 5-bromo-6-chloro-3-indolyl-β-D-glucuronide (Magenta Gluc), which is catabolized to glucuronic acid (a red/magenta-colored compound) by *E. coli* that produces the enzyme β-D-glucuronidase. This enzyme is the same enzyme tested for using other substrates such as the fluorogenic reaction with 4-methylumbelliferyl-β-D-glucuronide (MUG) observed by ultraviolet light (UV) fluorescence. Inoculated plates will be incubated at 35±0.5$^{o}$C for 2 hours to resuscitate stressed bacteria and then incubated at 44.5±0.2$^{o}$C for approximately 20 to 24 hours. *E. coli* will be extracted from fecal samples upon arrival at the lab by placing 0.1 to 10 g of sample in 1 to 99 mL of DI water. Serial dilutions of the feces and water solution will then be prepared and plated.

*E. coli* colonies from the modified mTEC medium will be picked and streaked for purity on nutrient agar with MUG (NA-MUG) to confirm glucuronidase activity and culture purity for the source sample isolates. Cultures of selected isolates will be archived using glycerol freezing medium (-80$^{o}$C). Up to 10 isolates per sample will be archived for water samples.

Up to 10 confirmed *E. coli* bacterial colonies from each sample will be screened for clones (identical strains from the same sample) using a repetitive sequence polymerase chain reaction (rep-PCR) method. Enterobacterial repetitive intergenic consensus sequence polymerase chain reaction (ERIC-PCR), a type of rep-PCR, has moderately high ability to resolve different closely related bacterial strains. Consumable costs for ERIC-PCR are inexpensive and labor costs for sample processing and data analyses are moderate. ERIC-PCR is a genetic fingerprinting method used in previous BST studies as well as many microbial ecology and epidemiological studies. ERIC elements are repeat DNA sequences found in varying numbers and locations in the genomes of different bacteria such as *E. coli*. The PCR is used to amplify the DNA regions between adjacent ERIC elements. This generates a DNA banding pattern or fingerprint, which looks similar to a barcode pattern. Different strains of *E. coli* bacteria have different numbers and locations of ERIC elements in their bacterial genomes, and therefore, have different ERIC-PCR fingerprints. ERIC-PCR is useful as a screening technique for library development because of its moderate cost and moderately high ability to resolve different strains of the same species of bacteria. Though rep-PCR banding patterns for isolates tend to be generally stable, differences in fingerprint image processing and PCR protocols between laboratories may result in reduced between-laboratory

reproducibility and pose a challenge to generating a composite library in multiple laboratories. Rigorous QA/QC, standardized protocols for PCR and image processing, and adequate training of personnel are crucial for generation of comparable data.

Non-clonal isolates will then be RiboPrinted. Ribotyping is a genetic fingerprinting method used in previous BST studies and many microbial ecology and epidemiological studies. In general, an endonuclease enzyme (*Hind* III) selectively cuts *E. coli* DNA wherever it recognizes a specific DNA sequence. The resulting DNA fragments are separated by size and probed for fragments containing particular conserved ribosomal RNA gene sequences, which results in DNA banding patterns or fingerprints that look similar to barcodes. Different strains of *E. coli* bacteria have differences in their DNA sequences and different numbers and locations of enzyme cutting sites, and therefore have different ribotyping fingerprints. The DuPont Qualicon RiboPrinter Microbial Characterization System allows automation of the ribotyping ('RiboPrinting').

After screening the ERIC-RP fingerprints of these known source samples for host specificity, they will be included in the Texas *E. coli* BST Library of *E. coli* isolates from known animal and human sources collected throughout Texas.

***Library-Independent Methods Development***

Using known source fecal material, SAML and UTSPH-EP will use the best available bacterial indicators to evaluate and further develop/refine source-specific bacterial PCR markers. Specifically, UTSPH EP efforts will focus on evaluating additional wildlife known-source fecal samples for human *Bacteroidales* HF183 marker and additional library-independent qPCR markers. AgriLife SCSC efforts will focus on evaluating additional of library-independent qPCR markers to the Texas BST toolbox.

***Water Sampling and Analysis***

The analytical methods are listed in Table A7.1 of Section A7. Laboratories collecting data under this QAPP are compliant with the TNI Standards and must be accredited in accordance with NELAP requirements for the matrix, method, parameter combinations listed in Table A7.1 of the QAPP on the date the samples are processed for analysis. In this project, these methods include the USEPA 1603 modified mTEC method for *E. coli* enumeration in water and fecal waste, as well as the BST methodology for library-dependent and library-independent isolate analysis.

SAML will analyze samples under this QAPP and is accredited by TCEQ and TNI to perform analyses using the methods listed in Table A7.1 in non-potable water. Copies of laboratory Quality Assurance Manuals and SOPs are retained by the laboratory and are available for review. Laboratory SOPs are consistent with EPA requirements as specified in the method.

**Failures in Measurement Systems and Corrective Actions**

Failures in measurement systems involve, but are not limited to such things as instrument malfunctions, failures in calibration, blank contamination, QC samples outside QAPP defined limits, etc. In many cases, the field technician or lab analyst will be able to correct the problem. If the problem is resolvable by the field technician or lab analyst, then they will document the problem on the field data sheet or laboratory record and complete the analysis. If the problem is

not resolvable, then it is conveyed to the UTSPH-EP Director, who will make the determination in coordination with the TWRI QAO. If the analytical system failure may compromise the sample results, the resulting data will not be reported to the TSSWCB as part of this project. The nature and disposition of the problem is reported on the data report. The TWRI QAO will include this information in the CAR and submit with the QPR which is sent to the TSSWCB PM.

**Table B4.1 Laboratory Analytical Methods**

| Laboratory Parameter | Method | Equipment Used |
|---|---|---|
| *E. coli* ERIC-PCR fingerprint | UTSPH-EP SOP | PCR thermal cycler, gel electrophoresis app |
| *E. coli* RiboPrint fingerprint | UTSPH-EP SOP | RiboPrinter |
| *Bacteroidales* PCR | UTSPH-EP SOP | PCR thermal cycler, gel electrophoresis app |
| *E. coli* in water | USEPA 1603 | Filtration apparatus, incubator |

SOP = Standard Operating Procedure

## Section B5: Quality Control Requirements

### *Laboratory Measurement Quality Control Requirements and Acceptability Criteria*

**Method Specific QC requirements**
QC samples, other than those specified later this section, are run (e.g., sample duplicates, surrogates, internal standards, continuing calibration samples, interference check samples, positive control, negative control, and media blank) as specified in the methods. The requirements for these samples, their acceptance criteria or instructions for establishing criteria, and corrective actions are method-specific.

**Laboratory Duplicates**
A laboratory duplicate is prepared by taking aliquots of a sample from the same container under laboratory conditions and processed and analyzed independently. A laboratory control sample duplicate (LCSD) is prepared in the laboratory by splitting aliquots of an LCS. Both samples are carried through the entire preparation and analytical process. LCSDs are used to assess precision and are performed at a rate of one per preparation batch. Measurement performance specifications are used to determine the acceptability of duplicate analyses as specified in Table A7.1.

**Method blank**
A method blank is a sample of matrix similar to the batch of associated samples (when available) that is free from the analytes of interest and is processed simultaneously with and under the same conditions as the samples through all steps of the analytical procedures, and in which no target analytes or interferences are present at concentrations that impact the analytical results for sample analyses. The method blanks are performed at a rate of once per preparation batch. The method blank is used to document contamination from the analytical process. For each of the analytical methods used in this project, method blanks should test negative for the target analytes/markers. In addition, no template negative controls will be analyzed for each batch of PCR. Samples associated with a contaminated blank shall be evaluated as to the best corrective action for the samples (e.g. reprocessing or data qualifying codes). In all cases the corrective action must be documented.

Table A7.1 lists the required accuracy, precision, and completeness limits for the parameters of interest. It is the responsibility of the Project Leader to verify that the data are representative. The Project Leader also has the responsibility of determining that the 90 percent completeness criteria is met, or will justify acceptance of a lesser percentage. All incidents requiring corrective action will be documented through use of CARs (Appendix A). Laboratory audits, sampling site audits, and quality assurance of field sampling methods will be conducted by the TSSWCB QAO or their designee at least once per the life of the project.

**Positive Controls**

Positive controls will consist of a laboratory control strain of *E. coli* (QC101) for ERIC-PCR and RiboPrinting and will be included in every preparation batch. For PCR-based library independent BST methods positive controls will consist of fecal DNA or *E. coli* isolate DNA from known human and animal sources and will be included with every preparation batch. Positive controls should always test positive. Samples associated with a failed positive control shall be evaluated as to the best corrective action for the samples (e.g. reprocessing or data qualifying codes). In all cases the corrective action must be documented. The analytical methods are listed in Table A7.1 of Section A7. No EPA-approved methods exist for BST. Detailed SOPs for these methods are provided in Appendix C.

**Failures in Quality Control and Corrective Action**

Notations of blank contamination will be noted in the QPR. Corrective action will involve identification of the possible cause (where possible) of the contamination failure. Any failure that has potential to compromise data validity will invalidate data, and the sampling event should be repeated. The resolution of the situation will be reported to the TSSWCB in the QPR. CARs will be maintained by the TWRI Project Lead.

## Section B6: Equipment Testing, Inspection, & Maintenance Requirements

To minimize downtime of all measurement systems, spare parts for laboratory equipment (Table B6.1) will be kept in the laboratory (when feasible), and all laboratory equipment will be maintained in working condition. All laboratory equipment will be tested, maintained, and inspected in accordance with manufacturer's instructions and recommendation in Standard Methods for the Examination of Water and Wastewater, 22nd Edition. Maintenance and inspection logs will be kept on each piece of laboratory equipment. Records of all tests, inspections, and maintenance will be maintained and log sheets kept showing time, date, and analyst signature. These records will be available for inspection by the TSSWCB. Failures in any testing, inspections, or calibration of equipment will result in a CAR and resolution of the situation will be reported to the TSSWCB in the QPR. CARs will be maintained by the TWRI Project Lead.

**Table B6.1 Equipment Inspection and Maintenance Requirements**

| **Equipment** | **Relevant Testing, Inspection & Maintenance Requirements** |
|---|---|
| Thermometers | SM 9020 B 3.a |
| PCR Thermal cycler | Per manufacturer |
| RiboPrinter | Per manufacturer & annual preventative maintenance |
| Water deionization units | SM 9020 B 3.d |
| Media dispensing apparatus | SM 9020 B 3.f |
| Autoclaves | SM 9020 B 3.h |
| Refrigerator | SM 9020 B 3.i |
| Ultra Low Freezer | SM 9020 B 3.j |
| Membrane filter equipment | SM 9020 B 3.k |
| Ultraviolet sterilization lamps | SM 9020 B 3.l |
| Biological safety cabinet | SM 9020 B 3.m |
| Incubators | SM 9020 B 3.o |
| Glassware and plastic ware | SM 9020 B 3.a |
| Utensils and containers | SM 9020 B 3.b |
| Dilution water bottles | SM 9020 B 3.c |

## Section B7: Instrument Calibration and Frequency

Each instrument has a specialized procedure for calibration and a specific type of standard used to verify calibration. The instruments requiring calibration are listed below in Table B7.1. All calibration procedures will meet the requirements specified in the USEPA-approved methods of analysis. The frequency of calibration as well as specific instructions applicable to the analytical methods recommended by the equipment manufacturer will be followed. All information concerning calibration will be recorded in a calibration logbook by the person performing the calibration and will be accessible for verification during either a laboratory or field audit.

All instruments or devices used in obtaining environmental data will be used according to appropriate laboratory or field practices. Written copies of SOPs are available for review upon request.

Standards used for instrument or method calibrations shall be of known purity and be National Institute of Standards and Technology (NIST) traceable whenever possible. When NIST traceability is not available, standards shall be of American Chemical Society or reagent grade quality, or of the best attainable grade. All certified standards shall be maintained and traceable with certificates on file in the laboratory. Dilutions from all standards will be recorded in the standards logbook and given unique identification numbers. The date, analyst initials, stock sources with lot number and manufacturer, and how dilutions were prepared will also be recorded in the standards logbook.

Failures in any testing, inspections, or calibration of equipment will result in a CAR and resolution of the situation will be reported to the TSSWCB in the QPR. CARs will be maintained by the TWRI Project Lead.

**Table B7.1 Instrument Calibration Requirements**

| Equipment | Relevant Calibration Requirement |
|---|---|
| RiboPrinter | Per manufacturer & annual preventative maintenance |
| PCR Thermal Cycler | Per manufacturer |

## Section B8: Inspection/Acceptance Requirements for Supplies and Consumables

All standards, reagents, media, plates, filters, and other consumable supplies are purchased from manufacturers with performance guarantees, and are inspected upon receipt for damage, missing parts, expiration date, and storage and handling requirements. Labels on reagents, chemicals, and standards are examined to ensure they are of appropriate quality, initialed by staff member and marked with receipt date. Volumetric glassware is inspected to ensure class "A" classification, where required. Media will be checked as described in quality control procedures. All supplies will be stored as per manufacturer labeling and discarded past expiration date. In general, supplies for microbiological analysis are received pre-sterilized, used as received, and not re-used.

## Section B9: Data Acquisition Requirements (Non-direct Measurements)

All required data to be used for this project will be collected in accordance with this QAPP.

Data analyzed using BST analysis methods for this project will consist of data produced during the course of this study under the specifics of this QAPP, or generated under previous TSSWCB studies with accepted QAPPs.

## Section B10: Data Management

### Laboratory Data

All field samples (known-source fecal samples) will be logged upon receipt, COC forms (if applicable) will be checked for number of samples, proper and exact identification number, signatures, dates, and type of analysis specified. TSSWCB will be notified if any discrepancy is found and laboratory analysis will not occur until proper corrections are made. All samples will be stored at 4ºC until analysis. Bacteriological samples will be given a unique identification number and logged into a database used to store field data. All backup and safety features of this database are the same as explained above. Enumerated bacteriological data will be manually entered into the database system for electronic storage. Per lab SOPs, at least 10% of all data manually entered in the database will be reviewed for accuracy by the Project Lead to ensure that there are no transcription errors. Hard copies of data will be printed and housed at the generating laboratory for a period of five years. Any COC's and bacteriological records related to QA/QC of bacteriological procedures will be housed at UTSPH-EP and SAML.

### Sample Delivery to Other Laboratories

Fecal samples for BST analysis will be collected and logged using the procedures described above in the field collection and lab data sections. The Technician ensures that these samples are handled according to procedures laid out in this QAPP and that COC forms are correctly filled out for sample delivery to the UTSPH-EP and SAML as appropriate. The Technician hand-delivers, or ships the samples, the appropriate Sheets of Lading for Fecal Specimen Transport (Appendix B) and COC forms to the UTSPH-EP and SAML labs via FedEx in an appropriately labeled container that maintains appropriate sample temperatures with the use of blue ice. Once the samples are received at the lab, the COC forms are updated and the Technician is notified of the samples receipt.

### Data Validation

Following review of laboratory data, any data that is not representative of environmental conditions, because it was generated through poor field or laboratory practices, will not be submitted to the TSSWCB. This determination will be made by the UTSPH-EP Project Co-Lead or SAML Project Co-Lead, TWRI QAO, TSSWCB QAO, and other personnel having direct experience with the data collection effort. This coordination is essential for the identification of valid data and the proper evaluation of that data. The validation will include the checks specified in Table D2.1.

### Data Reporting

Data will be reported according to the standards of the TSSWCB. A data review checklist (Appendix D) will assist in ensuring that the reported data are reported correctly.

### Data Dissemination

At the project's conclusion, the TWRI Project Lead will provide a copy of the complete project electronic database to the TSSWCB PM, along with the final report. TSSWCB may elect to take possession of all project records or records will be maintained according to the Project Records retention schedule in Table A.9. Summaries of the data will be presented in the final project report. TSSWCB may disseminate validated data and reports.

## Section C1: Assessments and Response Actions

Table C1.1 presents the types of assessments and response action for activities applicable to this QAPP.

**Table C1.1. Assessments and Response Actions**

| Assessment Activity | Approximate Schedule | Responsible Party | Scope | Response Requirements |
|---|---|---|---|---|
| Status Monitoring Oversight, etc. | Continuous | TWRI | Monitor project status and records to ensure requirements are being fulfilled. Monitoring & review performance & data quality | Report to TSSWCB in QPR. |
| Equipment testing | As needed | SAML, UTSPH-EP | Pass/Fail equipment testing | Repair or replace |
| Data completeness | As needed | SAML, UTSPH-EP | Assess samples analyzed vs. planned analysis | Reanalyze or amend objectives |
| Laboratory Inspections | TBD by TSSWCB | TSSWCB | Analytical and QC procedures in the laboratory | 30 days to respond to TSSWCB with corrective actions |
| Technical systems audit | As needed | TSSWCB | Assess compliance with QAPP; review facility and data management as they relate to the project | 30 days to respond to TSSWCB with corrective actions |
| Monitoring Systems Audit | Once per life of project | TSSWCB | Assess compliance with QAPP; review field sampling and data management as they relate to the project | 30 days to respond to TSSWCB with corrective actions |

## Corrective Action

The Project Leaders are responsible for implementing and tracking corrective action procedures as a result of audit findings. Records of audit findings and corrective actions are maintained by the TSSWCB QAO.

If audit findings and corrective actions cannot be resolved, then the authority and responsibility for terminating work is specified in agreements or contracts between participating organizations.

## Section C2: Reports to Management

QPRs will be generated by TWRI and will note activities conducted in connection with the water quality monitoring program, items or areas identified as potential problems, and any variation or supplement to the QAPP. CARs will be utilized when necessary (Appendix A) and will be maintained in an accessible location for reference. CARs that result in changes or variations from the QAPP will be made known to pertinent project personnel, documented in an update or amendment to the QAPP and distributed to personnel listed in Section A3.

TWRI will work with AgriLife SCSC and UTSPH EP to develop a Final Report for submission to the TSSWCB that summarizes activities completed, conclusions reached during the project, and the extent to which project goals and measures of success have been achieved.

## Section D1: Data Review, Validation, and Verification

All data obtained from field and laboratory measurements will be reviewed and verified for integrity, continuity, reasonableness, and conformance to project requirements, and then validated against the DQOs outlined in Section A7. Only those data that are supported by appropriate QC data and meet the DQOs defined for this project will be considered acceptable for use.

The procedures for verification and validation of data are described in Section D2, below. Project Leaders are responsible for ensuring that field and laboratory data collected are properly reviewed, verified, and submitted in the required format for the project database. TWRI is responsible for validating that all data collected meet the DQOs of the project are suitable for submission to TSSWCB.

## Section D2: Validation and Verification Methods

All data will be verified to ensure they are representative of the samples analyzed and locations where measurements were made, and that the data and associated QC data conform to project specifications. The TWRI Project Lead is responsible for the integrity, validation, and verification of the data each field and laboratory task generates or handles throughout each process. The field and laboratory QA tasks ensure the verification of field data, electronically generated data, and data on COC forms and hard copy output from instruments.

Verification, validation, and integrity review of data will be performed using self-assessments and peer review, as appropriate to the project task, followed by technical review by the manager of the task. The data to be verified (listed by task in Table D2.1) are evaluated against project specifications (Section A7 and Section B5) and are checked to ensure the verification of raw data for errors, especially errors in transcription, calculations, and data input. Potential outliers are identified by examination for unreasonable data, or identified using computer-based statistical software. If a question arises or an error or potential outlier is identified, the manager of the task responsible for generating the data is contacted to resolve the issue. Issues that can be corrected are corrected and documented electronically or by initialing and dating the associated paperwork. If an issue cannot be corrected, the task manager consults with the TSSWCB QAO to establish the appropriate course of action, or the data associated with the issue are rejected. Performance of these tasks is documented by completion of the data review checklist (Appendix D).

Project Leaders and TWRI are responsible for validating that the verified data are scientifically sound, defensible, of known precision, accuracy, integrity, meet the DQOs of the project, and are reportable to the TSSWCB.

**Table D2.1 Data Review, Verification, and Validation Procedures**

| Data to be Verified | Field† Supervisor | Laboratory Supervisor | PM/QAO Task‡ |
|---|---|---|---|
| Collection & analysis techniques consistent with SOPs & QAPP | X | X | X |
| Field QC samples collected for all parameters as prescribed in the QAPP | X | | X |
| Field documentation complete | X | | X |
| Instrument calibration data complete | | X | X |
| Sample documentation complete | X | X | X |
| Field QC results within acceptance limits | | | X |
| Sample identifications | X | X | X |
| Chain of custody complete/acceptable | X | X | X |
| Sample preservation and handling | X | X | X |
| Holding times | X | X | X |
| Instrument calibration data | | X | X |
| QC samples analyzed at required frequencies | | X | X |
| QC samples within acceptance limits | | X | X |
| Instrument readings/printouts | | X | X |
| Calculations | | X | X |
| Laboratory data verification for integrity, precision, accuracy, and validation | | X | X |
| Laboratory data reports | | X | X |
| Data entered in required format | X | X | X |
| Site ID number assigned | | | X |
| Absence of transcription error | X | X | X |
| Reasonableness of data | X | X | X |
| Electronic submittal errors | | X | X |
| Sampling and analytical data gaps | X | X | X |

† Field and Laboratory Supervisor may be the same person
‡ TSSWCB PM / QAO will monitor data for QA/QC purposes as needed.
All other entities are required to inspect 100% of the data prior to approval

## Section D3: Reconciliation with User Requirements

Data produced by this project will be evaluated against the established DQOs and user requirements to determine if any reconciliation is needed. Reconciliation concerning the quality, quantity or usability of the data will be reconciled with the user during the data acceptance process. Corrective Action Reports will be initiated in cases where invalid or incorrect data have been detected. Data that have been reviewed, verified, and validated will be summarized for their ability to meet the data quality objectives of the project and the informational needs of water quality agency decision-makers and watershed stakeholders.

The final data for the project will be reviewed to ensure that it meets the requirements as described in this QAPP. Data summaries along with descriptions of any limitations on data use will be included in the final report. Only BST data that has met the data quality objectives described in this QAPP will be reported and included in the final project report. Since BST is an evolving science and no EPA-approved protocols currently exist, a discussion of the uncertainties surrounding source identification and the appropriate use of BST results will be included in the project final report. Data and information produced thru this project will provide needed information pertaining to Texas BST efforts.

*This Page Left Blank Intentionally*

# APPENDIX A: Corrective Action Report

**Corrective Action Report**
**CAR #:_____**

Date:_____ Area/Location:_____

Reported by:_____ Activity:_____

State the nature of the problem, nonconformance, or out-of-control situation:
_____
_____
_____
_____
_____

Possible causes:
_____
_____
_____

Recommended corrective action:
_____
_____
_____

CAR routed to:_____
Received by:_____

Corrective Actions taken:
_____
_____
_____
_____

Has problem been corrected?: YES NO

Immediate Supervisor:_____

Project Leader:_____

Quality Assurance Officer:_____

# APPENDIX B: Chain of Custody Record & Sheets of Lading for Fecal Specimen Transport Template

# CHAIN OF CUSTODY RECORD

| **Project:** | **Remarks:** |
|---|---|
| **Name and signature of collector:** | **Air bill #** |

| **Station ID** | **Sample ID** | **Media Code** | **Sample Type** | **Preservative** | **Collection Date** | **Time** |
|---|---|---|---|---|---|---|
| | | | | | | |
| | | | | | | |
| | | | | | | |
| | | | | | | |
| | | | | | | |
| | | | | | | |
| | | | | | | |
| | | | | | | |
| | | | | | | |
| | | | | | | |
| | | | | | | |
| | | | | | | |
| | | | | | | |
| | | | | | | |
| | | | | | | |

| Relinquished by: | Date: | Time: | Received by: | Date: | Time: |
|---|---|---|---|---|---|

Laboratory Notes:

Media Code: (**FS**) Fecal Sample; (**SS**) Sewage Sample

# Sheets of Lading for Fecal Specimen Transport

**(Collector's Organization)**

Texas BST Program (FY18-FY19)

(Collector's Name and title)
(Collector's Phone Number)

**In case of EMERGENCY:**
(Contact name and number)

**Date:_____Time:_____**

**Sample:** Fecal **Hazard:** Bacteria

**Species/ Animal**:_____

**Photo: Yes No**

**GPS (or other location note)**: Lat_____Long_____

_____

**Other Info:_____**

**Technician:_____**

# APPENDIX C: BST Standard Operating Procedures

C-1: Collection of Fecal Samples for Bacterial Source Tracking……..51
C-2: Laboratory Protocol for Isolation and Confirmation of *Escherichia coli* from Fecal Specimen .....55
C-3: Cultivation of *E. coli* from Water Samples and Pre-Processing for Isolation and Bacterial Source Tracking.....56
C-4: Archival of *E. coli* Isolates .....60
C-5: DNA fingerprinting of *E. coli* Isolates using enterobacterial repetitive intergenic consensus sequence (ERIC)-PCR.....63
C-6: DNA fingerprinting of *E. coli* Isolates using the DUPONT Riboprinter® system .....68
C-7: Bacterial source tracking (BST) analysis of water samples using *Bacteroidales* PCR .....83

# C-1: Collection of Fecal Samples for Bacterial Source Tracking

**August 13, 2018**

**Elizabeth Casarez**
**University of Texas-Houston School of Public Health El Paso Regional Campus**

## 1.0. PURPOSE AND APPLICABILITY

The purpose of this Standard Operating Procedure (SOP) is to establish a uniform procedure for the collection and transport of fecal samples to the laboratory for subsequent isolation of *E. coli* for Bacterial Source Tracking (BST) analyses.

## 2.0. SUMMARY OF THE METHOD

Fresh fecal, sewage, or septage samples are collected, placed at 4°C, and shipped/transported to the appropriate BST laboratory as soon as possible.

## 3.0. HEALTH AND SAFETY WARNINGS

Fecal, sewage, or septage samples may contain pathogenic microorganisms. The sampler should treat all such samples as though each contained a chemical and/or a biological agent that could cause illness. The sampler should wear protective gloves and handle containers with care. The sampler should exercise special caution to avoid environmental hazards such as animals (e.g., snakes), extreme climatic conditions, and automobiles (if collecting a sample near a major road).

## 4.0. INTERFERENCES

Possible issues include the collection of old, unidentifiable, or contaminated samples. Only fresh fecal samples of known origin should be collected. Samples should be carefully collected to avoid contamination from the surrounding environment (soil, etc.). Specific suggestions for avoiding these interferences are provided in the procedures section of this SOP.

## 5.0. PERSONNEL QUALIFICATIONS

This SOP is written for persons with a thorough knowledge of field sampling procedures and a basic understanding of microbiological procedures, especially aseptic technique.

## 6.0. EQUIPMENT AND SUPPLIES

6.1 Sterile fecal tubes (Sarstedt, cat# 80.734.311) or similar containers
6.2 Sterile spatulas, or similar, for collection of samples
6.3 Sterile plastic loops (optional)
6.4 Sterile scalpels (optional)
6.5 Sterile bottles (optional; for wastewater collection)
6.6 Whirl-Pak bags, or similar
6.7 Cooler with ice or blue ice for transport of samples

6.8 Refrigerator (~4°C)

## 7.0. PROCEDURAL STEPS

7.1. Only fresh fecal samples of known origin should be collected. Specifically, fecal samples should be obtained in one of five ways:

a. Collected from animals visually observed defecating.
b. Collected from trapped animals.
c. Collected from intestines of animals legally harvested.
d. Collected from the intestines of animals recently killed by cars (within 24 hours).
e. Human (wastewater) samples collected from individual septic tanks, composite septic samples from pump trucks, from wastewater treatment plant influent (for plants with secondary disinfection or lagoon treatment), or from lagoon treatment effluents.

7.2. Samples should be carefully collected to avoid contamination. Samples on the ground should be collected with a sterile spatula, or similar device, while avoiding collection of material in contact with soil or other possible sources of contamination. Intestinal samples should be collected from animals by using sterile loops inserted anally or by cutting into the intestine using a sterile scalpel. Wastewater samples can initially be collected with sterile bottles or other suitable device and then transferred to the fecal tubes described below.

7.3. Each fecal sample should be placed in a new, sterile fecal tube, or similar container. Tubes should be filled approximately ¾ full (can provide less material for smaller animals).

7.4. Samples should be placed in a cooler on ice and/or refrigerated (~4°C) following collection.

7.5. At the time of sampling, record detailed information on the tube regarding the sample including:

a. Sampling date
b. Sampling time
c. Animal species
d. Sample location (e.g., GPS coordinates [preferred] or town, city, and/or county)
e. Sample collector's name/initials
f. Any other pertinent information, e.g. sex of animal or any other easily obtainable information such as beef cattle versus dairy cattle

7.6. Notify the appropriate lab via email or phone as soon as possible (prior to or immediately following sample collection) with an estimated number of samples that will be shipped and the expected date of shipment. This will allow the lab to

make appropriate preparations to process the samples immediately upon arrival. BST Laboratory contact information is below:

UTSPH-EP
Elizabeth Casarez; elizabeth.a.casarez@uth.tmc.edu; 915 747-8076
Carlos Monserrat; carlos.monserrat@uth.tmc.edu; 915 747-8538

SAML
Terry Gentry; tjgentry@tamu.edu; 979-845-5323

7.7. Samples should be shipped (at 4ºC) as soon as possible (within 3 days) to the appropriate lab (addresses below). Ship samples (and COCs) in insulated coolers (marked on outside to indicate that contents are perishable) with sufficient ice packs to maintain ~4°C. 'Blue-ice' or freezer blocks should be used to keep the samples cool, but not frozen during transport. Samples should be placed in secondary containment such as large Whirl-Pak or zip-top bags. Shipping addresses for BST Laboratories are:

UTSPH-EP
Carlos Monserrat
UT-Houston School of Public Health
500 West University Ave
Biology Building B224
El Paso, TX 79968
915-747-8538

SAML
Terry Gentry
Texas A&M University
Soil & Crop Sciences; Heep Center 539
370 Olsen Blvd
College Station, TX 77843
979-845-5604

7.8. Notification of shipment should be sent to the appropriate lab via email or phone (see contact info above) no later than the day of overnight shipping. Notification should include tracking number and contact person for confirmation upon receipt of samples.

## 8.0. QUALITY ASSURANCE AND QUALITY CONTROL

Care should be exercised to avoid the interferences listed in section 4.0. Any potential issues for the BST Laboratory to consider should be noted on the COC form. Following collection, samples should be maintained at ~4°C and transported/shipped to the BST

Laboratory as soon as possible in order to minimize changes in microbial composition of the samples.

## 9.0. REFERENCES

Casarez, E. A., S. D. Pillai, J. B. Mott, M. Vargas, K. E. Dean and G. D. Di Giovanni. 2007. Direct comparison of four bacterial source tracking methods and use of composite data sets. J. Appl. Microbiol. 103:350-364.

Di Giovanni, G. D., E. A. Casarez, T. J. Gentry, E. C. Martin, L. Gregory, and K. Wagner. 2013. Support analytical infrastructure and further development of a statewide bacterial source tracking library. TR-448. Texas Water Resources Institute, College Station, TX.

## 10.0. REVISION HISTORY

| Revision | Date | Responsible Person | Description of Change |
|---|---|---|---|
| 1 | June 2015 | Elizabeth Casarez | Initial Release |
| 2 | August 2018 | Lucas Gregory | Updated UTH Lab name and laboratory personnel |
| 3 | March 2019 | Anna Gitter/Elizabeth Casarez | Updated UTH laboratory personnel |

## C-2: Laboratory Protocol for Isolation and Confirmation of *Escherichia coli* from Fecal Specimens

*Note: All collection and handling of fecal specimens should be performed using protective gear (e.g. latex or nitrile gloves). Specimens should be handled aseptically to ensure sample quality and minimize exposure of personnel to pathogens. All feces collected will be placed in screw capped sterile containers. Containers will be labeled with: Name of collector, date, species, GPS location, and photo of specimen before collection. Containers will then be placed in ziplock biohazard bags with lading pouch. Information will be written on lading report and placed in the bag. Fecal specimens will be placed in an insulated cooler on ice during transport.*

*Note: All handling of fecal specimens and cultures will be performed using a Class 2 biological safety cabinet to minimize the exposure of laboratory personnel to pathogens.*

1. Using aseptic techniques, between 0.1 and 10 g of fecal material will be placed into 1 to 99 mL of sterile PBS and shaken vigorously to suspend the fecal matter in the PBS solution. Serial dilutions of the suspension will be performed and plated on modified mTEC agar (USEPA-821-R-02-023, Modified USEPA Method 1603; http://www.epa.gov/nerlcwww/1603sp02.pdf) for isolation and enumeration of *E. coli* colonies.

2. Incubate the plate inverted at 35°C ± 0.5°C for 2 hour and then at 44.5±0.2°C for 20 to 24 h.

3. Examine the plate for presumptive *E. coli* colonies, which will appear red or magenta colored.

4. Select up to five presumptive *E. coli* colonies and streak each colony for purity onto a labeled nutrient agar MUG (NA-MUG) plate.

5. Invert and incubate plates at 35 to 37°C for 20 to 24 h.

6. Examine the cultures using a **long-wave handheld UV lamp**. If there is a mixture of fluorescent and non-fluorescent colonies, select a well isolated fluorescent colony and streak again onto NA-MUG for purity.

7. At the discretion of the laboratory, additional biochemical tests such as urease, indole, and citrate tests may be performed.

# C-3: Cultivation of *E. coli* from Water Samples and Pre-Processing for Isolation and Bacterial Source Tracking

**August 13, 2018**

**Elizabeth Casarez**
**University of Texas-Houston School of Public Health El Paso Regional Campus**

## 1.0. PURPOSE AND APPLICABILITY

The purpose of this Standard Operating Procedure (SOP) is to establish a uniform procedure for the initial growth and pre-processing of *E. coli* from water samples for transport to Bacterial Source Tracking Laboratories (BST) for further *E. coli* isolation and characterization for BST analyses.

## 2.0. SUMMARY OF THE METHOD

Water samples are processed with EPA Method 1603 to grow and enumerate *E. coli* on solid media. Plates containing *E. coli* colonies are then transported/shipped to a BST Laboratory for subsequent analyses.

## 3.0. HEALTH AND SAFETY WARNINGS

Water samples may contain pathogenic microorganisms. The analyst should treat all such samples as though each contained a chemical and/or a biological agent that could cause illness. The analyst should wear protective gloves and handle containers with care.

## 4.0. INTERFERENCES

Turbid waters may clog membrane filters before the desired volume of sample can be processed. If this occurs, filter as much water as possible (up to the desired volume) and record the amount of water filtered on bag/tube that the filter is placed into and also on the chain-of-custody form.

## 5.0. PERSONNEL QUALIFICATIONS

This SOP is written for persons with a thorough knowledge of laboratory and microbiological procedures, especially aseptic technique.

## 6.0. EQUIPMENT AND SUPPLIES

6.1 Pipettes, sterile, plastic, of appropriate volume
6.2 Sterile graduated cylinders, 100 mL, covered with aluminum foil.
6.3 Sterile membrane filtration units (funnel), plastic, wrapped with aluminum foil. Sterile membrane filtration units (funnel), plastic, in individual autoclave bag or covered with aluminum foil.
6.4 Electric vacuum pump, as a vacuum source
6.5 Filter flask, vacuum, usually 1.0 L, with appropriate tubing
6.6 Forceps, straight or curved, with smooth tips to handle filters without damage

6.7 Ethanol, wide-mouth container, for flame-sterilizing forceps
6.8 Whirl-Pak® bags or equivalent
6.9 Autoclave or steam sterilizer capable of achieving 121°C [15 lb pressure per square inch (PSI) for 15 minutes
6.10 Burner for sterilizing loops and needles
6.11 Modified mTEC agar plates
6.12 Membrane filters, sterile, white, grid marked, 47 mm diameter, with 0.45 µm pore size (Cat#HAWG047S6)
6.13 Incubator maintained at 35°C ± 0.5°C
6.14 Waterbath maintained at 44.5°C ± 0.2°C
6.15 Filter paper
6.16 Marker
6.17 Parafilm
6.18 Cooler with ice or blue ice for transport of samples
6.19 Refrigerator (~4°C)

## 7.0. PROCEDURAL STEPS

7.1. Follow the EPA Method 1603 Modified mTEC procedure (EPA-821-R-09-007; http://water.epa.gov/scitech/methods/cwa/bioindicators/upload/method_1603.pdf).

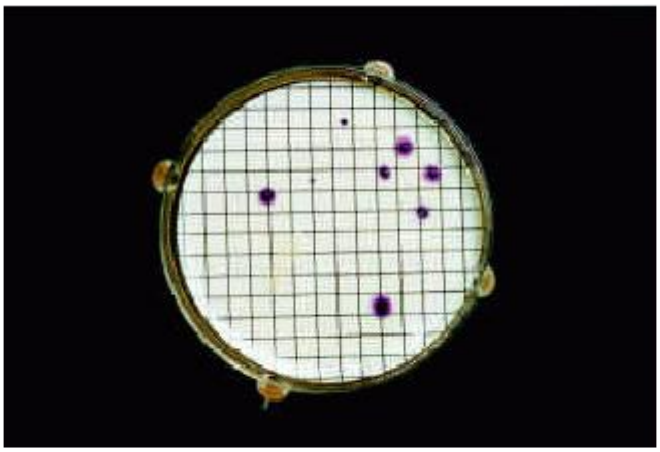

7.2. After 22 +/- 2 hour incubation at 44.5°C, red or magenta colonies are considered 'typical' *E. coli*.

7.3. Using a black Sharpie or similar marker, mark *E. coli* colonies with a 'dot' on the back of the plate. This helps to ensure that colonies which grew during the incubation period, as opposed to during shipping or storage, are subsequently isolated. If the colonies were counted, please also write the total number of counted colonies on the back of each plate.

*E. coli* colonies on modified mTEC agar are red to magenta.

7.4. After incubation and counting, immediately store plates at 4ºC 'media-side up' (i.e., upside down), so condensation does not fall onto the filter during storage.

7.5. The plates should be shipped as soon as possible (preferably the day after filtration, but no later than three days following filtration) to the BST Laboratory (addresses below) via overnight delivery.

7.6. In preparation for shipment, each plate should be sealed with Parafilm around the edge to protect the cultures from contamination during transit. Dilution series for each sample should subsequently be grouped together and placed in secondary containers such as large Whirl-Pak or zip-top bags.

7.7. 'Blue-ice' or freezer blocks should be used to keep the plates cool (~4ºC), but not frozen during transport. Do not use dry ice for shipment as this will freeze the media and cultures.

7.8. Ship plates (and COCs) in insulated coolers with sufficient ice packs to maintain ~4°C to:

UTSPH-EP
Carlos Monserrat
UT-Houston School of Public Health
500 West University Ave
Biology Building B224
El Paso, TX 79968
915-747-8538

SAML
Terry Gentry
Texas A&M University
Soil & Crop Sciences; Heep Center 539
370 Olsen Blvd
College Station, TX 77843
979-845-5604

7.9. Notification of shipment should be sent to the appropriate lab via email or phone (see contact info below) no later than the day of overnight shipping. Notification should include the *E. coli* count datasheet (if available), shipment tracking number, and direct contact person for confirmation upon receipt of samples.

UTSPH-EP
Elizabeth Casarez; elizabeth.a.casarez@uth.tmc.edu; 915 747-8076
Carlos Monserrat; carlos.monserrat@uth.tmc.edu; 915 747-8538

SAML
Terry Gentry; tjgentry@tamu.edu; 979-845-5323

## 8.0. QUALITY ASSURANCE AND QUALITY CONTROL

A method blank (sterile water or phosphate-buffered saline (PBS)) is processed with each batch of samples.

## 9.0. REFERENCES

Casarez, E. A., S. D. Pillai, J. B. Mott, M. Vargas, K. E. Dean and G. D. Di Giovanni. 2007. Direct comparison of four bacterial source tracking methods and use of composite data sets. J. Appl. Microbiol. 103:350-364.

Di Giovanni, G. D., E. A. Casarez, T. J. Gentry, E. C. Martin, L. Gregory, and K. Wagner. 2013. Support analytical infrastructure and further development of a statewide bacterial source tracking library. TR-448. Texas Water Resources Institute, College Station, TX.

USEPA. 2009. Method 1603: *Escherichia coli* (*E. coli*) in water by membrane filtration using modified membrane-thermotolerant *Escherichia coli* agar (modified mTEC). EPA-821-R-09-007. December 2009.

## 10.0. REVISION HISTORY

| Revision | Date | Responsible Person | Description of Change |
|---|---|---|---|
| 1 | June 2015 | Elizabeth Casarez | Initial Release |
| 2 | August 2018 | Lucas Gregory | Updated UTH Lab name and contact information |
| 3 | March 2019 | Anna Gitter/Elizabeth Casarez | Updated UTH laboratory contact information |

# C-4: Archival of *E. coli* Isolates

**August 13, 2018**

**Elizabeth Casarez**
**University of Texas-Houston School of Public Health El Paso Regional Campus**

## 1.0. PURPOSE AND APPLICABILITY

The purpose of this Standard Operating Procedure (SOP) is to establish a uniform procedure for the isolation and archival of *E. coli* isolates for further Bacterial Source Tracking (BST) analyses.

## 2.0. SUMMARY OF THE METHOD

Individual *E. coli* colonies are selected from EPA Method 1603 plates, streaked onto nutrient agar-MUG plates for verification and placed into glycerol stocks for archival at -80°C.

## 3.0. HEALTH AND SAFETY WARNINGS

Environmental *E. coli* isolates may be pathogenic. Water samples may contain pathogenic microorganisms. All handling of cultures will be performed using a Class II biological safety cabinet to minimize the exposure of laboratory personnel to pathogens. Analysts should wear appropriate personal protective equipment (e.g., gloves). Analysts should wear eye protection and exercise caution when using UV light to examine plates.

## 4.0. INTERFERENCES

It is important that the isolates be streaked to purity in order to prevent issues arising from co-cultures. The archived isolates should be from colonies which have been plated for purity several times and lab personnel are confident that purity has been achieved.

## 5.0. PERSONNEL QUALIFICATIONS

This SOP is written for persons with a thorough knowledge of laboratory and microbiological procedures, especially aseptic technique.

## 6.0. EQUIPMENT AND SUPPLIES

- 6.1 Sterile, plastic inoculating loops or needles; alternatively a wire loop or needle can be used if sterilized between transfers
- 6.2 Nutrient agar-MUG plates
- 6.3 Brain Heart Infusion (BHI) agar plates
- 6.4 Longwave UV lamp
- 6.5 Sterile cryovials (2 ml)
- 6.6 Liquid nitrogen in dewar vessel
- 6.7 Sterile, tryptone soy broth (TSB) containing 20% reagent grade glycerol
- 6.8 Vortex

6.9 Pipette and sterile tips (1 ml)
6.10 Incubator (~35°C)
6.11 Freezer (-80°C)
6.12 Class II biosafety cabinet

## 7.0. PROCEDURAL STEPS

7.1 Select a presumptive *E. coli* colony from the EPA Method 1603 plates used to process tested water samples. Streak cells from the colony onto a NA-MUG plate. Depending upon the number of isolates desired, repeat the process streaking each isolate onto an individual NA-MUG plate.

7.2 Incubate NA-MUG plates at ~35°C for ~24 hr.

7.3 Examine the plates using a long-wave handheld UV lamp. *E. coli* colonies will fluoresce.

7.4 If a culture is verified as *E. coli* in the above step and appears to be pure based on uniform appearance on the NA-MUG plate, select a well-isolated colony using a bacteriological loop and streak onto a Brain Heart Infusion (BHI) agar plate. Incubate the plate at ~35°C for ~24 hr. If the culture is not pure, continue streaking individual colonies onto NA-MUG until purity is achieved.

7.5 Select a well-isolated colony using a bacteriological loop and transfer the colony to a labeled, sterile cryovial containing 1 mL of tryptone soy broth (TSB) with 20% reagent grade glycerol.

7.6. Once the colony has been transferred to the cryovial, firmly cap the cryovial and verify that the cells have been resuspended by vortexing for several seconds.

7.7. Plunge the cyrovial into liquid nitrogen until frozen. Immediately transfer to a cryostorage box and place in -80°C freezer. Cultures may be stored for several years under these conditions.

7.8. To recover cultures from frozen storage, remove the cultures from the freezer and place the cryovials in a freezer block. Do not allow cultures to thaw. Using a bacteriological loop, scrape the topmost portion of the culture and transfer to growth medium, being careful not to contaminate the top or inside of the vial. Invert and incubate plates at 35 to 37°C for 20 to 24 hr. Reclose the cryovial before the contents thaw and return it to the -80°C freezer.

## 8.0. QUALITY ASSURANCE AND QUALITY CONTROL

A positive control (*E. coli* QC101) is processed with each batch of samples.

## 9.0. REFERENCES

Casarez, E. A., S. D. Pillai, J. B. Mott, M. Vargas, K. E. Dean and G. D. Di Giovanni. 2007. Direct comparison of four bacterial source tracking methods and use of composite data sets. J. Appl. Microbiol. 103:350-364.

Di Giovanni, G. D., E. A. Casarez, T. J. Gentry, E. C. Martin, L. Gregory, and K. Wagner. 2013. Support analytical infrastructure and further development of a statewide bacterial source tracking library. TR-448. Texas Water Resources Institute, College Station, TX.

USEPA. 2009. Method 1603: *Escherichia coli* (*E. coli*) in water by membrane filtration using modified membrane-thermotolerant *Escherichia coli* agar (modified mTEC). EPA-821-R-09-007. December 2009.

## 10.0. REVISION HISTORY

| Revision | Date | Responsible Person | Description of Change |
|---|---|---|---|
| 1 | June 2015 | Elizabeth Casarez | Initial Release |
| 2 | August 2018 | Lucas Gregory | Updated UTH Lab name |

# C-5: DNA fingerprinting of *E. coli* Isolates using enterobacterial repetitive intergenic consensus sequence (ERIC)-PCR

**August 13, 2018**

**Joy Truesdale**
**University of Texas-Houston School of Public Health El Paso Regional Campus**

## 1.0. PURPOSE AND APPLICABILITY

The purpose of this Standard Operating Procedure (SOP) is to establish a uniform procedure for DNA fingerprinting *E. coli* isolates using enterobacterial repetitive intergenic consensus sequence (ERIC)-PCR.

## 2.0. SUMMARY OF THE METHOD

Cell suspensions from individual *E. coli* isolates are DNA fingerprinted using ERIC-PCR. Following PCR, amplicons are analyzed using gel electrophoresis to generate the DNA fingerprint which will ultimately be used for further Bacterial Source Tracking (BST) analysis.

## 3.0. HEALTH AND SAFETY WARNINGS

Environmental *E. coli* isolates may be pathogenic. Water samples may contain pathogenic microorganisms. All handling of live cultures will be performed using a Class II biological safety cabinet to minimize the exposure of laboratory personnel to pathogens. Ethidium bromide is a mutagen and should be handled with care. Analysts should wear appropriate personal protective equipment (e.g., gloves). Analysts should wear eye protection and exercise caution when using UV light to image gels.

## 4.0. INTERFERENCES

It is important that the isolates be streaked to purity in order to prevent issues arising from co-cultures. The tested isolates should be from colonies which have been plated for purity several times and lab personnel are confident that purity has been achieved.

## 5.0. PERSONNEL QUALIFICATIONS

This SOP is written for persons with a thorough knowledge of laboratory and microbiological procedures, especially aseptic technique, PCR, and gel electrophoresis.

## 6.0. EQUIPMENT AND SUPPLIES

6.1 Sterile, plastic inoculating loops
6.2 Sterile, 1.5 ml microfuge tubes
6.3 Sterile, molecular-grade water
6.4 Vortex
6.5 *E. coli* QC101 cell-suspension
6.6 Thermal cycler
6.7 Pipettes and sterile tips (5-1000 µl)

6.8 PCR master mix (recipe below)
6.9 Agarose
6.10 1X Tris/Borate/EDTA (TBE)
6.11 Microwave
6.12 Electrophoresis system with recirculating pump
6.13 Ziploc bags
6.14 Freezer (-20°C)
6.15 6X ERIC-PCR loading buffer
   a. 25 mg bromphenol blue (0.25%)
   b. 1.5 g ficoll 400 (15%)
   c. Add molecular grade water to 10 mL
   d. Divide into 1 mL aliquots and freeze
   e. The aliquot currently being used can be stored in the cold room or at 4°C
6.16 100 bp ladder (0.33 µg/10 µL) (1500 µL final, enough for 150 lanes)
   a. 200 µL Roche DNA Marker XIV (Cat. #1721933) 0.25 µg/µL 100 bp ladder
   b. 300 µL 6X ERIC-PCR loading buffer
   c. 150 µL 10X PCR buffer
   d. 850 µL molecular grade water
   e. Store in cold room
6.17 Ethidium bromide stain (0.5 µg/mL)
   a. 1250 mL 1X TBE
   b. 62.5 µL ethidium bromide (Sigma, 10 mg/mL)
   c. Store covered at room temp,
   d. Can use up to 5 times by adding 10 µL ethidium bromide each additional use
6.18 ERIC-PCR blank;
   a. 100 µL 10X PCR buffer
   b. 200 µL 6X ERIC-PCR loading buffer
   c. 900 µL molecular grade water
   d. Store in cold room or at 4°C
6.19 Class II biosafety cabinet
6.20 PCR plates
6.21 Platform shaker
6.22 Gel imager
6.23 Cold room (~4°C)

## 7.0. PROCEDURAL STEPS

7.1. Select isolated colonies from overnight cultures of *E. coli* isolates on Brain-Heart Infusion (BHI) plates.

7.2. Transfer colonies using a 1 µL loop to a sterile microfuge tube containing 100 µL of sterile molecular grade water; vortex briefly to suspend cells.

7.3. Prepare sufficient PCR Master Mix for samples, including one blank per 10 samples to account for volume loss due to repeat pipetting. Prepare Master Mix for each sample as noted below. One full PCR batch on the thermal cycler 48 well-plate will have 46 samples, *E. coli* QC101, and a no-template control.

**ERIC-PCR Master Mix – 24 samples + 2 blanks, prepare X 2 for full 48-well plate**

| **MASTER MIX** | Amt (µL) | Final Calc | Final Units |
|---|---|---|---|
| Molecular Grade Water | **819** | | |
| 10X PCR buffer I w Mg (Life Technologies) | **130** | 1 | X (1.5 mM) |
| 20 mM dNTP (GE Healthcare) | **13** | 200 | µM each |
| ERIC Primer Mix* | **130** | 600 | nM each |
| BSA (30 mg/ml) | **65** | 1.5 | µg/µL |
| AmpliTaqGold (Life Technologies) | **13** | 2.5 | Units/rxn |

*ERIC1R 5' ATGTAAGCTCCTGGGGATTCAC;
ERIC2 5' AAGTAAGTGACTGGGGTGAGCG

7.4. Dispense 45 µl of Master Mix for each sample into the appropriate well of PCR plate.

7.5. Briefly vortex cell suspensions, then add 5 µl of each cell suspension to the appropriate PCR well.

7.6. Carefully seal plate using an adhesive PCR cover.

7.7. Load the plate into the thermal cycler and run under the "ERIC-PCR" program with the following cycling conditions:

a. Initial denaturation at 95°C for 10 min

b. 35 Cycles:
   i. Denaturation at 94°C for 30 sec
   ii. Annealing at 52°C for 1 min
   iii. Extension at 72°C for 5 min

c. Final Extension at 72°C for 10 min

7.8. Store completed reactions at -20°C until analyzed by gel electrophoresis.

7.9. Prepare a 250 mL, 2% agarose gel using a 500 mL bottle. Add 250 mL of 1 X Tris/Borate/EDTA (TBE) buffer and 5.0 g agarose. Microwave until agarose is fully dissolved, tighten cap and let cool 1 to 2 minutes, then pour agarose into casting tray with 30-tooth, 1 mm thick comb.

7.10. Allow gel to solidify for approximately 30 minutes on the bench, then without removing comb place in Ziploc bag and solidify overnight in the refrigerator. The next day carefully remove comb, transfer to gel tank containing pre-cooled 1X TBE buffer. Replace TBE in gel tank after it has been used twice.

7.11. Remove PCR reactions from freezer. Add 10 µL of 6X ERIC-PCR Loading Buffer to each PCR well and mix with pipette tip.

7.12. Load the gel in the cold room as follows (max. of 23 samples + QC101 + NTC per gel):

a. Load 10 µl of 100 bp ladder (0.33 µg) into the first lane

b. Load 10 µl of sample ERIC-PCR reactions into next 6 lanes

c. Load 10 µl of 100 bp ladder (0.33 µg)

d. Load 10 µl of sample ERIC-PCR reactions into next 6 lanes

e. Load 10 µl of 100 bp ladder (0.33 µg)

f. Load 10 µl of sample ERIC-PCR reactions into next 6 lanes

g. Load 10 µl of 100 bp ladder (0.33 µg)

h. Load 10 µl of sample ERIC-PCR reactions into next 5 lanes

i. Load PCR Batch *E. coli* QC101 and NTC into next 2 lanes

j. Load 10 µl of 100 bp ladder (0.33 µg)

If running a gel with fewer samples, follow steps above until last sample, followed by *E. coli* QC101, NTC and ladder, then load ERIC-PCR Blank into remaining lanes on gel.

7.13. Start electrophoresis power supply set at 100 volts, run for 1 hour.

7.14. Stop power supply, set time to “000”, set voltage to 200 ,start circulating pump at setting #2, and run for 4 hours.

7.15. After electrophoresis, stain gel in Ethidium Bromide Stain for 20 minutes with rocking on a platform shaker (save stain, see Step 6.17d).

7.16. Destain gel for 10 minutes in 1X TBE buffer. Save destaining solution. Discard after three uses.

7.17. Follow Gel Imager SOP for image capture. Save digital photograph as a TIFF file (default) and print a hardcopy for notebook.

## 8.0. QUALITY ASSURANCE AND QUALITY CONTROL

A method blank (sterile water; “no template control”) and positive control (*E. coli* QC101) is processed with each batch of samples.

## 9.0. REFERENCES

Casarez, E. A., S. D. Pillai, J. B. Mott, M. Vargas, K. E. Dean and G. D. Di Giovanni. 2007. Direct comparison of four bacterial source tracking methods and use of composite data sets. J. Appl. Microbiol. 103:350-364.

Di Giovanni, G. D., E. A. Casarez, T. J. Gentry, E. C. Martin, L. Gregory, and K. Wagner. 2013. Support analytical infrastructure and further development of a statewide bacterial source tracking library. TR-448. Texas Water Resources Institute, College Station, TX.

## 10.0. REVISION HISTORY

| Revision | Date | Responsible Person | Description of Change |
|---|---|---|---|
| 1 | June 2015 | Joy Truesdale | Initial Release |
| 2 | August 2018 | Lucas Gregory | Update UTH Lab name |

# C-6: DNA fingerprinting of *E. coli* Isolates using the DUPONT Riboprinter® system

**August 13, 2018**

**Elizabeth Casarez**
**University of Texas-Houston School of Public Health El Paso Regional Campus**

## 1.0. PURPOSE AND APPLICABILITY

The purpose of this Standard Operating Procedure (SOP) is to establish a uniform procedure for DNA fingerprinting *E. coli* isolates using the DuPont RiboPrinter® System.

## 2.0. SUMMARY OF THE METHOD

Cell suspensions from individual *E. coli* isolates are DNA fingerprinted using the DuPont RiboPrinter® System. The DuPont™ RiboPrinter® System automates restriction fragment length polymorphism (RFLP) analysis and targets the rRNA-coding region of the bacterial genome. Restriction enzymes cut bacterial DNA into fragments that are processed to form a characteristic banding pattern or "fingerprint." The system captures an image of the banding pattern and digitizes it as a RiboPrint™ pattern. This pattern is ultimately compared to a reference database of patterns for further Bacterial Source Tracking (BST) analysis.

## 3.0. HEALTH AND SAFETY WARNINGS

Environmental *E. coli* isolates may be pathogenic. All handling of live cultures will be performed using a Class II biological safety cabinet to minimize the exposure of laboratory personnel to pathogens. Analysts should wear appropriate personal protective equipment (e.g., gloves).

## 4.0. INTERFERENCES

It is important that the tested isolates be streaked to purity in order to prevent issues arising from co-cultures. The tested isolates should be from colonies which have been plated for purity several times and lab personnel are confident that purity has been achieved.

## 5.0. PERSONNEL QUALIFICATIONS

This SOP is written for persons with a thorough knowledge of laboratory and microbiological procedures, especially aseptic technique.

## 6.0. EQUIPMENT AND SUPPLIES

6.1 DuPont RiboPrinter® System and consumables
6.2 *Hin*dIII restriction enzyme 50 U/µL working stock (*Hin*d III (NEB Cat. #R0104M) is prepared in a Sarstedt 500-µL microfuge tube (Cat. #72730-005) as follows. 50 U/µL: 26.5 µL *Hin*d III and 26.5 µL of NEB 10X Buffer 2.1.
6.3 BHI agar plates
6.4 Incubator (37°C)
6.5 Sterile, plastic inoculating loops or needles

6.6 Sterile, microcentrifuge tubes
6.7 Pipette and sterile pipette tips
6.8 Surface disinfecting solution (e.g., 10% bleach or 70% ethanol)
6.9 Class II biosafety cabinet

## 7.0. PROCEDURAL STEPS

### 7.1. Storing and Handling Disposables

a. Check the lot expiration date on each label for details and rotate the stock to optimize use.

b. Heating membrane and probe (MP) Base. After storage and the temperature changes that occur during shipment, the oxygen in the buffer loaded in the MP base may need to be removed before use. This is called degassing and is accomplished if needed by heating the base pack overnight in your incubator. To degas buffer:

1. Place enough MP base packs for the next day's production in their storage pouches in an incubator set at 37°C.

2. Allow the base pack to degas for 16 to 24 hours prior to loading in the characterization unit. You may do this while you are incubating samples, since the base packs are sealed in their pouches. This procedure allows you to start a batch immediately at the beginning of the next shift.

3. If you do not use the heated base packs, you can return them to storage and reuse them. These base packs should be heated again before reuse since temperature cycling affects oxygen content in the buffer.

c. Preparing Lysing Agent (for *Staphylococcus* and lactic-acid bacteria only). Lysing agent (A and B) is shipped frozen and must be stored at -20°C. Lysing agent must be thawed before use. This only takes about 5 minutes. If the lysing agent will not be used again for more than 2 hours, the material should be returned to the freezer. Lysing agent can be re-frozen several times with no effect on performance.

### 7.2. Sample Preparation Procedures

a. Incubate and Inspect the Samples

1. Use BHI agar plates prepared within the last 30 days. Do not use plates that appear dry or dehydrated. Such plates can cause problems when you attempt to "pick" the colonies for use in the RiboPrinter® system.

1. Using a pure isolated colony as the source, streak BHI agar plates heavily in the upper portion of the plate to create a lawn. Streak the remainder of the plate lightly to create single colonies.

2. Follow standard laboratory techniques. Heat plates for 18 to 30 hours in a humidified incubator at 37 °C.

b. Transfer Sample Buffer to Intermediate Tubes

1. Locate the 250 mL twist-top bottle of sample buffer supplied in Pack # 1. Install the twist cap.

2. Transfer about 5 mL of buffer to a sterilized disposable 15 mL intermediate working tube.

c. Add sample buffer to microcentrifuge tubes

1. Place a sterile 0.65 mL microfuge tube in each of the eight holes in the lower row of the sample preparation rack.

2. <u>For Gram negative samples (including *E. coli*), add 200 µL of sample buffer from the intermediate tube</u>.

   For Gram positive samples (e.g. *S. aureus* and *L. innocua* QC strains), add 40 µL of sample buffer.

3. Close the lids on the tubes.

d. Harvest the Samples

1. Using autoclaved colony picks and making certain not to gouge the agar, carefully place the pick into one of the single colonies or the lawn. You need a sample area at least equal to that of the bottom of the colony pick. In most

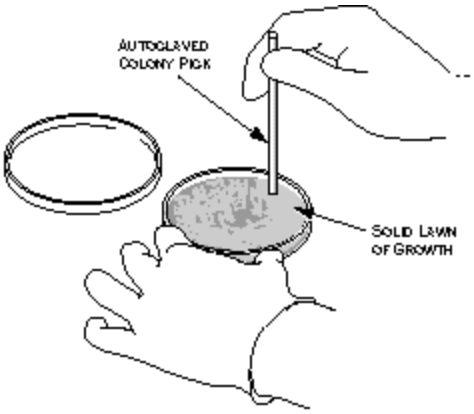

cases you will need to harvest from the lawn area of the plate. If you are working with large colonies, a single colony will be adequate.

2. For Gram negative samples (e.g. *E. coli*), perform 1 pick placed into 200 µL of sample buffer.

   CAUTION! Do not try to use the same pick twice on a plate. You need to harvest only enough sample to cover the bottom surface of the pick. Make sure the end of the pick is flat, if not, use a different pick.

   CAUTION! Do not overload the harvesting pick. Collect only enough sample to cover the base of the pick. Over sampling will cause inaccurate results. Over sampling is a particular problem with *Staphylococcus*.

e. Mix the Samples

***WARNING!*** *Perform sample preparation using a Class 2 biological safety cabinet since aerosols may be formed during mixing of the samples.*

1. Making certain not to touch the sample end of the pick, place the pick into one of the filled sample tubes.

2. While holding the tube with the open end facing away from you, carefully attach the pick to the hand-held mixer. The fit of the pick in the coupling will be loose.

***WARNING!*** *Do not turn on the mixer unless the pick is inside the sample tube and below the surface of the liquid. Turning the unit on at other times will cause the sample to aerosolize and may cause contamination.*

3. Press the ON lever on the mixer for about 5 seconds.

4. Release the lever and carefully remove the colony pick. The sample liquid should appear turbid.

5. For **Gram positive samples only**, (e.g. *Staphylococcus* and *Listeria*) locate a new colony pick and repeat the steps for harvesting and mixing samples, adding a second sample to the original tube. Discard the used picks in a biowaste bag.

6. Cap the sample tube.

7. Move the tube to the top row of the sample preparation rack. This indicates that the tube is filled.

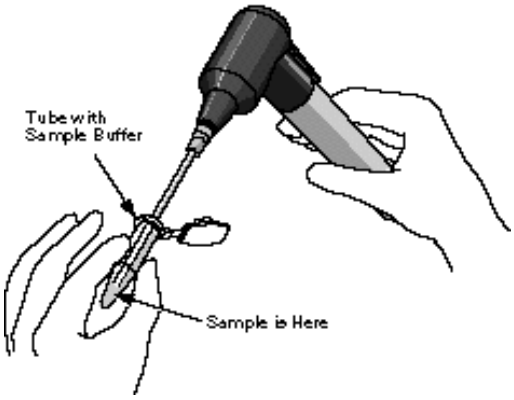


**7.3. Transfer the Samples to the Sample Carrier**

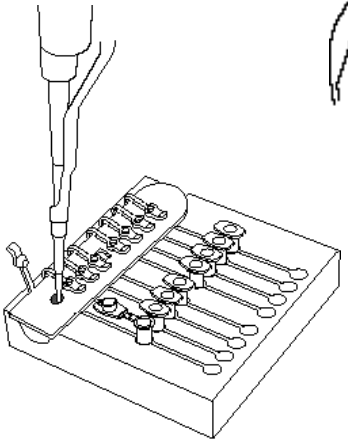

a. Open the lid covering the first well of the sample carrier.

b. Using a 100 µL pipetter, pipette 30 µL of sample from the microcentrifuge tube into the well.

c. Close the lid cover for the well.

d. Repeat for remaining samples using a new pipet tip for each sample.

***CAUTION!*** *Transfer the sample carrier to the Heat Treatment Station within 2 hours. If you wait longer than 2 hours, you will have to discard the sample carrier and begin again for this batch.*

e. Lightly wipe down the outer surfaces of the sample carrier with a lab wipe wetted with surface disinfectant (10% bleach or 70% alcohol).

f. Write down the name or code you use to identify the sample and the well number in the sample carrier for each sample using a sample log sheet.

**7.4. Place the Sample Carrier in the Heat Treatment Station and Process the Sample Carrier**

a. Place the sample carrier into the Heat Treatment Station. The display on the Heat Treatment Station will show **Insert**, if power is available. If the display is

blank, make certain that the power cord on the back of the station is properly connected.

After you insert the carrier, the display shows **Press Button**.

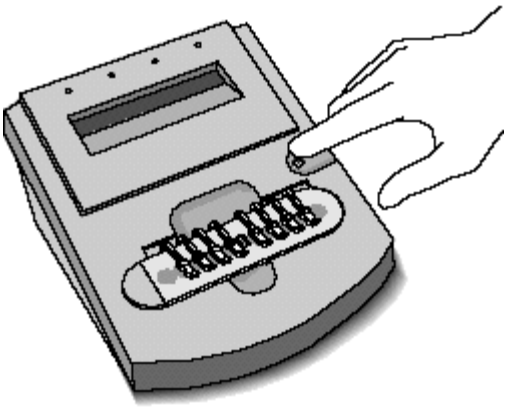

a. Press the button on the Heat Treatment Station.

The display shows **Warm up** and counts down from **10** while the station is warming up. The actual warm up cycle varies with the condition of the room and the heat treatment station. Normal time is about 4 minutes.

When the station reaches operating temperature, the display changes to **Heat** and counts down from **13.** This represents each minute of heat treatment.

The indicator message changes to **Cool.** The display counts down from **9**, indicating the minutes remaining in the cooling cycle**.** If necessary, you can remove the carrier as soon as the **Cool** message appears.

a. The heat treatment step is finished when the display shows **READY** and counts down from **90.** The display will flash and an audible beep will sound three times. The alarm will then beep once every 10 minutes until the sample is removed or 90 minutes elapses.

***Caution!*** *The heat-treated samples must be used within the 90-minute period at room temperature or they must be discarded. The heat-treated samples may be stored at this point (prior to adding Lysis Agents, if required) for 1 week at 4 °C, or for several months at -70 °C.*

### 7.5. Add the Lysing Agents (for *Staphylococcus* and lactic-acid bacteria only)

**a.** Using a 10-µL pipetter and new tips for each addition, add 5 µL of Lysing Agents A and B to each sample. Note: this step is omitted for *E. coli* as it has no effect

on ribopatterns. Lysing Agents were specifically developed for *Staphylococcus* and Lactic-Acid bacteria samples.

***Caution!*** *This step must be performed just prior (within 10 minutes) of loading the samples into the RiboPrinter and starting the run.*

## 7.6. Creating and Loading a Batch

a. There are three options under the Operations menu for creating standard batches:
   - *EcoR*I batches (VCA)
   - *Pst*I batches (VCB)
   - *Pvu*II batches (VCC)

   You can also create special batches:
   - Restriction Enzyme Flexibility batches
   - **Substitute Enzyme batches (including *Hin*d III)**

b. From the Instrument Control Base Window:

1. Move the pointer to Operations and click with the mouse button. The Operations menu appears.

2. Move the pointer to Create Substitute Enzyme Batch and click with the mouse button.

3. Use the View menu to remove any optional items you do not wish to fill in. The system requires at least Sample Type and RiboGroup Library information for each sample. You cannot remove these options. The **Clear** option de-selects the **Use Default ID Libraries.** You will have to enter a DuPont ID and Custom ID library name for all samples. These become required fields and the system will make you enter data before you can save the information in this window.

   ***CAUTION!*** *If you change the display after you have entered information, you will lose all the information in the window. The window will redraw with a new blank display showing the items you have selected.*

4. To enter information about the sample, click on the **View** button with the mouse button, then click on **Sample Items**. Click on the options you want to display.

5. Enter your initials and any comment you want to record about the batch.

6. Select the lot number fields and record for all reagents.

***CAUTION!*** *All fields must be completed or the system will not let you start processing the batch.*

7. For each well in the sample carrier, choose the type (Sample or Control [QC Number]) from the Sample Type field. The system defaults to Sample.

8. Once you define the Sample Type as Sample, type in the name you actually want to use. This information will appear as Sample Label in the Data Analysis software screens.

9. You can change the RiboGroup library name if needed. Do this by clicking on the button next to the field with the mouse button. A pop up menu appears listing your choices. If you want to add a new library name, move the pointer to the line and click with the mouse button to get a cursor, then type in the new library name. Once you have saved this file, the new name will be added to the pop up list for future use. Do **NOT** change the DuPont ID field. If you select one of the QC strains, the system automatically enters QC in the DuPont ID and RiboGroup Library fields. Do not change these names. If you wish, you may enter a name for the Custom ID library.

10. Repeat for the other seven samples.

11. Click on Save and Submit Batch to Instrument.

## 7.7. Loading Disposables

a. Follow the screen prompts to load disposables and check the DNA Prep Waste. The icons on the window will flash red to tell you to remove and load an item. The screen prompts you about which Separation and Transfer chamber to use for the membrane and gel cassette. The LDD Pipette will move to physically block you from placing samples in the wrong chamber.

   ***CAUTION!*** *Do not try to move the pipette manually. You will cause the system to lose the step count. This can result in the loss of batch data. If the pipette is blocking the S/T chamber that you are instructed to use, STOP. Call Customer Support.*

   ***CAUTION!*** *Do not load disposables until you are prompted by the system. If you try to load them earlier, the alarm will sound as long as the doors are open. If you do load disposables ahead of time, the MP Base will be moved to the wrong position and you will not be able to begin processing the batch. You will not be able to move the MP base manually.*

b. Check the DNA Preparation Waste Container

1. The DNA Prep waste container must be visually checked before every batch. If the container looks nearly full (about 1 inch from the top), remove the container, unscrew the cap and empty into the liquid biohazard waste.

   ***WARNING!*** *Do not tip the DNA Preparation waste container when you remove it.*

   ***WARNING!*** *Do not unscrew the cap from the DNA Preparation waste container if the fluid level has risen into the cap. First pour the excess waste liquid into the liquid biohazard waste.*

   ***WARNING!*** *When replacing container make sure that the cap is properly threaded in place. If the cap is only partially threaded, it can snag the pipette during operation.*

c. Load the Sample Carrier

1. Place the sealed carrier into the labeled slot on the far right of the characterization unit.

2. Push the sample carrier down firmly until it snaps into place.

   ***CAUTION!*** *Place the rounded edge of the sample carrier on your right as you view the characterization unit. Position the carrier this way to insure correct identification of the sample wells.*

d. Load the DNA Prep Carrier

1. Remove the DNA Prep carrier from the refrigerator.

2. Check the wells in the carrier. If most of the liquid appears to be in the bottom of the wells and there are no bubbles, go to step 3. Otherwise **lightly tap the side of the carrier a few times with your finger to release any material that has adhered to the lid.**

3. **CAUTION!** Do not tap the carrier briskly. This may cause the marker to degrade which can create inaccurate results.

4. Remove a vial of DNA Prep Enzyme (*Hin*d III or *Eco*R I) from the freezer. ***Hin*d III (NEB Cat. #R0104M) is prepared in a Sarstedt 500-µL microfuge tube (Cat. #72730-005) as a 50 U/µL working stock as follows.**

50 U/µL: 26.5 µL *Hin*d III and 26.5 µL of NEB 10X Buffer 2

**During addition of the Buffer, mix enzyme and buffer to homogeneity by stirring with the micropipette tip.**

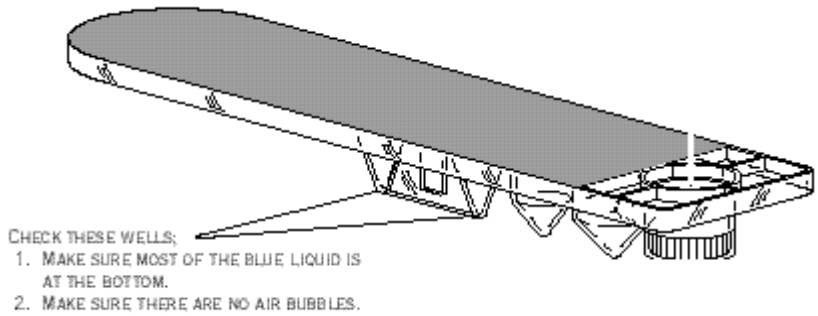


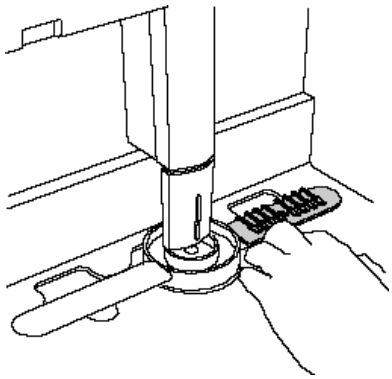

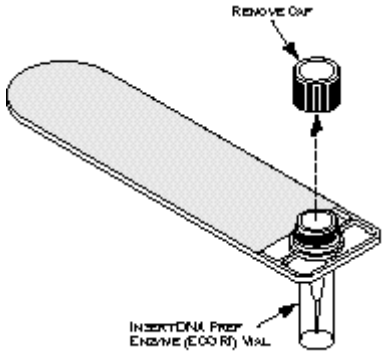


5. Remove the cap from the Enzyme vial.

6. Insert the vial into the carrier.

7. Place the DNA Prep carrier into the slot labeled **Reagent** to the left of the sample carrier slot.

8. Push the DNA Prep carrier down firmly until it snaps into place.

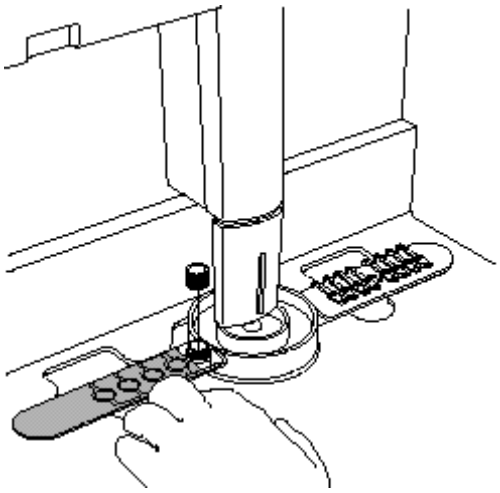

e. Load the MP Base and Carousel

1. Unpack the disposables.

2. Remove the MP base (Pack 5) from the incubator and the Conjugate (Pack 5A), Substrate (Pack 5B), and Probe (Pack 5C) from the refrigerator.

3. Remove each insert from its pouch. Tap the powdered reagent packs gently to bring all powder to the bottom of the packs. Place reagent packs in the MP base and load the base in the carousel.

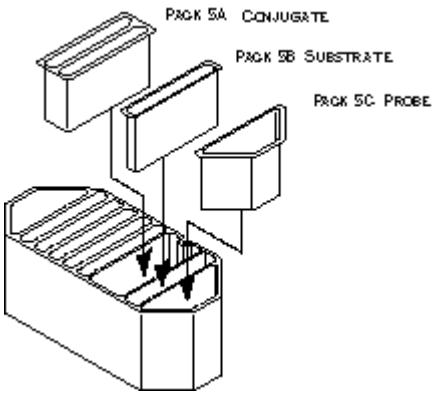


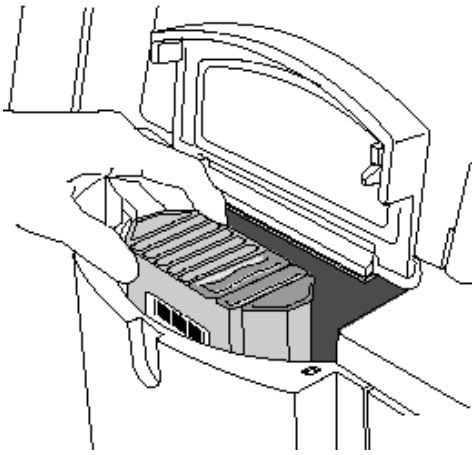

***CAUTION!*** *Push each insert firmly into place. If part of the insert extends above the top of the base, it could catch on the bottom of the deck and cause a system*

*error. You could lose one or more batches as a result. Each insert is keyed by shape and cannot be inserted incorrectly.*

f. Load the Gel Cassette

1. Remove the gel cassette from its package.
2. Grasp one end of the rubber comb and gently pull the comb from the cassette.
3. Unfold the handle of the cassette towards you until the handle snaps into place.
4. Check the front edge of the gel cassette and the lanes of the gel.

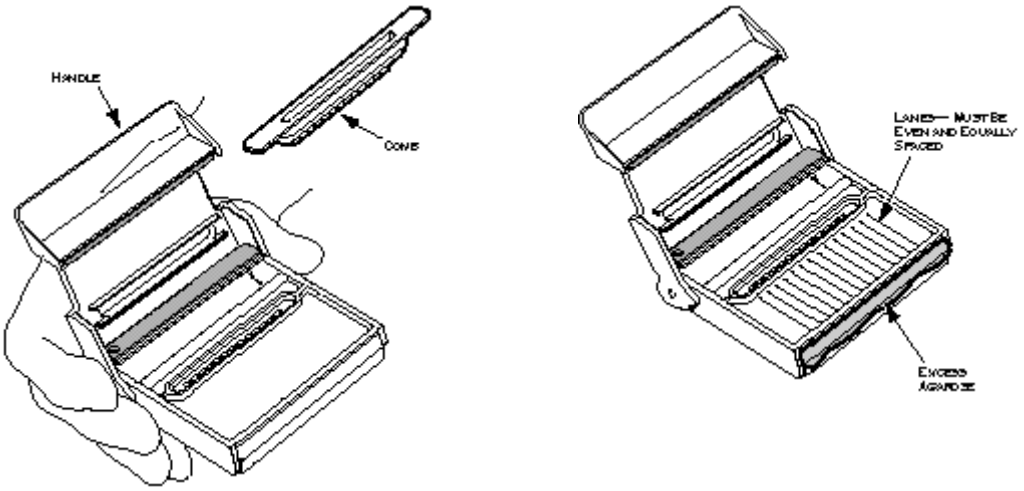


***Warning!*** *If the cassette shows a build up of excess gel on the front edge, or if you notice any shrinkage of the gel away from the cassette or bubbles, record the lot number and call Customer Support. Use a new cassette for this run.*

5. Insert the gel cassette into the slot labeled **Gel Bay.** The RiboPrinter® system will prevent the insertion of the cassette into the incorrect slot by blocking one slot with the LDD Pipette.

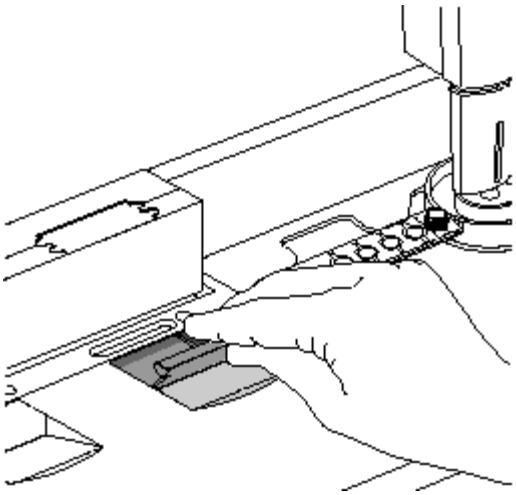

6. Press the cassette forward firmly until it snaps into place.

g. Load the Membrane

1. Grasp the membrane and carefully drop it into the front slot and flip the metal bracket against the back of the membrane.

   ***CAUTION!*** *You can insert the membrane backwards. This will cause an alarm that prevents the sample from being processed until the error is corrected. Always make certain that the two large slots are on top and that the square hole on the side faces your left as you insert the membrane.*

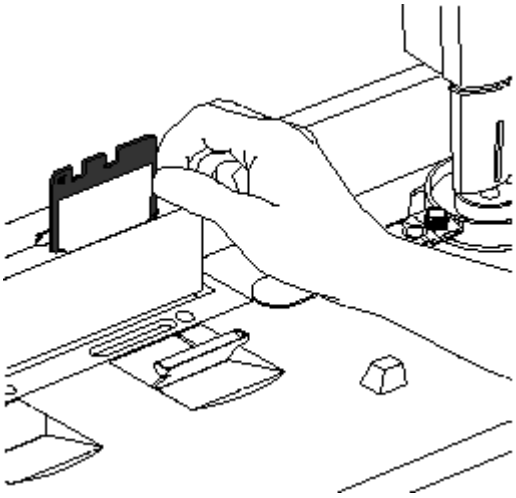

h. Close all doors and the instrument will begin sample processing.

i. Load the Next Batch. The RiboPrinter® microbial characterization system lets you load up to four VCA batches in an eight hour period. Other batches may take longer

to process. The chart below shows the approximate loading times for each batch in a work shift using only the VCA protocol.

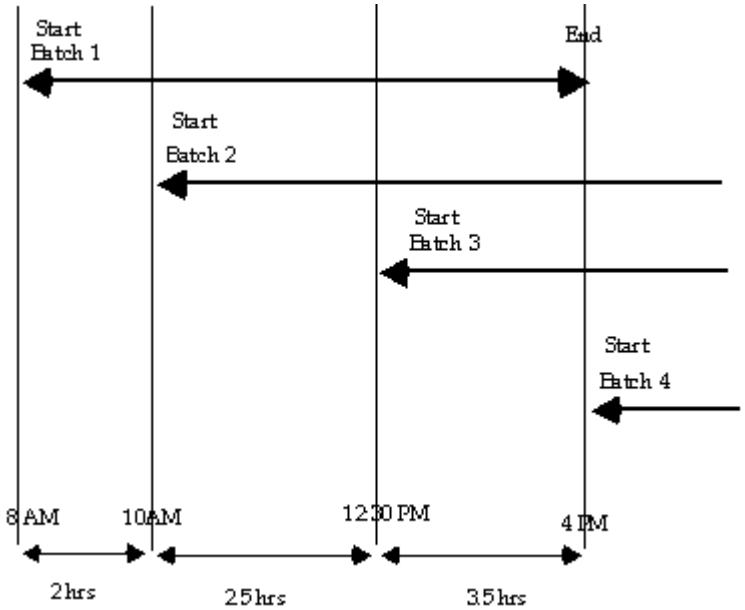


2. You can now use the **Create Batch** option to set up a new pending batch.

3. When you complete the information window and click on the **Start Normal Batch** option, the window displays a message telling you when you can load the next batch.

### 7.8. Batch Report

After image processing is completed, the system automatically runs a series of analysis functions and generates a Batch Information Report. This task does not require any action on the part of the operator. Reports are automatically saved to the hard disk of the computer and sent to the printer.

## 8.0. QUALITY ASSURANCE AND QUALITY CONTROL

A positive control (*E. coli* QC101) is processed each day the RiboPrinter is run.

## 9.0. REFERENCES

Casarez, E. A., S. D. Pillai, J. B. Mott, M. Vargas, K. E. Dean and G. D. Di Giovanni. 2007. Direct comparison of four bacterial source tracking methods and use of composite data sets. J. Appl. Microbiol. 103:350-364.

Di Giovanni, G. D., E. A. Casarez, T. J. Gentry, E. C. Martin, L. Gregory, and K. Wagner. 2013. Support analytical infrastructure and further development of a statewide

bacterial source tracking library. TR-448. Texas Water Resources Institute, College Station, TX.

DuPont. 2013. DUPONT™ RIBOPRINTER® SYSTEM. DuPont, Wilmington, DE.

## 10.0. REVISION HISTORY

| Revision | Date | Responsible Person | Description of Change |
|---|---|---|---|
| 1 | June 2015 | Elizabeth Casarez | Initial Release |
| 2 | August 2018 | Lucas Gregory | Update UTH Lab name |

# C-7: Bacterial source tracking (BST) analysis of water samples using *Bacteroidales* PCR

**August 13, 2018**

**Joy Truesdale**
**University of Texas-Houston School of Public Health El Paso Regional Campus**

## 1.0. PURPOSE AND APPLICABILITY

The purpose of this Standard Operating Procedure (SOP) is to establish a uniform procedure for the Bacterial Source Tracking (BST) analyses of water samples targeting library-independent DNA markers including those for source-specific bacteria within the order *Bacteroidales*.

## 2.0. SUMMARY OF THE METHOD

DNA is extracted from microbial biomass collected from a water sample. Source specific markers are amplified using the polymerase chain reaction (PCR). The presence or absence of specific markers is determined by visualizing the PCR products using gel electrophoresis.

## 3.0. HEALTH AND SAFETY WARNINGS

Environmental water samples may contain pathogenic microorganisms. The analyst should treat all sources of wastewater as though each contained a chemical and/or a biological agent that could cause illness. The analyst should wear protective gloves, lab coat, and handle containers with care. Ethidium bromide is a mutagen and should be handled with care. Analysts should wear appropriate personal protective equipment (e.g., gloves). Analysts should wear eye protection and exercise caution when using UV light to image gels.

## 4.0. INTERFERENCES

Environmental waters may contain substances which inhibit PCR. In some cases, it may be necessary to further purify or dilute the sample prior to PCR analysis.

## 5.0. PERSONNEL QUALIFICATIONS

This SOP is written for persons with a thorough knowledge of laboratory and microbiological procedures, especially aseptic technique, PCR, and gel electrophoresis.

## 6.0. EQUIPMENT AND SUPPLIES

6.1 Qiagen DNeasy PowerWater® Kit (Catalog no. 14900-50-NF)
6.2 Ethanol (100%)
6.3 Pipettes, sterile pipet tips and sterile forceps
6.4 Dry bath set at 55°C
6.5 Refrigerator at 4°C
6.6 Centrifuges (for 2ml collection tubes, and for 5 ml PowerWater® Bead tubes)
6.7 PCR plates, strips, or tubes

6.8 Thermal cycler
6.9 PCR master mix (recipe below)
6.10 Agarose
6.11 1X Tris/Borate/EDTA (TBE)
6.12 Microwave
6.13 Electrophoresis system with recirculating pump
6.14 Ethidium bromide
6.15 6X PCR loading buffer
   f. 25 mg bromphenol blue (0.25%)
   g. 1.5 g ficoll 400 (15%)
   h. Add molecular grade water to 10 mL
   i. Divide into 1 mL aliquots and freeze
   j. The aliquot currently being used can be stored in the cold room
6.16. 50 bp ladder (0.33 µg/10 µL) (1500 µL final, enough for 150 lanes)
   f. 200 µL Roche DNA Marker XIII (Cat. #1172193301) 0.25 µg/µL 50 bp ladder
   g. 300 µL 6X PCR loading buffer
   h. 150 µL 10X PCR buffer
   i. 850 µL molecular grade water
   j. Store in cold room
6.17 Freezer (-80°C)
6.18 Gel imager

## 7.0. PROCEDURAL STEPS

### 7.1. DNA EXTRACTION

1. DNA is extracted from the water concentrates using the Qiagen PowerWater® Kit. Turn on the dry bath and set at 55°C. Heat Solution PW1 at 55°C for 10 minutes, check to see that there is no precipitate in the solution and everything has dissolved completely.

2. Thaw samples and transfer filters (using flame sterilized forceps) into the 5 ml PowerWater® Bead Tube.

3. Add 1ml of the Solution PW1. Solution PW1 should be used when still warm.

4. Secure the PowerWater® Bead Tube horizontally to a MO BIO Vortex Adapter, (catalog number 13000-V1-15 or 13000-V1-5). Vortex at maximum speed for 5 minutes.

5. Centrifuge the tubes ≤ 4000 x g for 1 minute at room temperature.

6. Transfer all the supernatant to a clean 2 ml Collection Tube.

Draw up the supernatant using a 1 ml pipette tip by placing it down into the beads. Placing the pipette tip down into the beads is required. Pipette more than once to ensure removal of all supernatant. Any carryover of beads will not affect subsequent steps. Expect to recover between 600-650 µl of supernatant depending on the type of filter membrane used.

7. Centrifuge at 13,000 x g for 1 minute.

8. Avoiding the pellet, transfer the supernatant to a clean 2 ml Collection Tube.

9. Add 200 µl of Solution PW2 and vortex briefly to mix. Incubate at 4°C for 5 minutes.

10. Centrifuge the tubes at 13,000 x g for 1 minute.

11. Avoiding the pellet, transfer the supernatant to a clean 2 ml Collection Tube.

12. Add 650 µl of Solution PW3 and vortex briefly to mix.
    Check Solution PW3 for precipitation prior to use. Warm if necessary. Solution PW3 can be used while still warm.

13. Load 650 µl of supernatant onto a Spin Filter and centrifuge at 13,000 x g for 1 minute. Discard the flow through and repeat until all the supernatant has been loaded onto the Spin Filter. A total of 2-3 loads for each sample processed may be required.

Place the Spin Filter basket into a clean 2 ml Collection Tube.

Shake to mix Solution PW4 before use. Add 650 µl of Solution PW4 and centrifuge at 13,000 x g for 1 minute.

Discard the flow through and add 650 µl of Solution PW5 and centrifuge at 13,000 x g for 1 minute.

Discard the flow through and centrifuge again at 13,000 x g for 2 minutes to remove residual wash.

Place the Spin Filter basket into a clean 2 ml Collection Tube.

Add 100 µl of Solution PW6 to the center of the white filter membrane.

Centrifuge at 13,000 x g for 1 minute.

Discard the Spin Filter basket. The DNA is now ready for any downstream application.

Label the tubes and store the DNA at -80°C.

## 7.2. PCR AMPLIFICATION

Prepare sufficient PCR Master Mix for samples and controls, as well as one blank per 10 samples to account for volume loss due to repeat pipetting.

***Bacteroidales* PCR Master Mix – per sample**

| MASTER MIX | Amt (µL) | Final Calc | Final Units |
|---|---|---|---|
| Molecular Grade Water | **30.2** | | |
| 10X PCR buffer I w Mg (Life Technologies) | **5** | 1 | X |
| MgCl2 (25 mM) (Life Technologies) | **1** | 0.5 (2.0 final) | mM |
| each dGTP, dCTP, dATP (33 mM mix) (GE Healthcare) | **0.3** | 200 | µM each |
| dUTP (100 mM) (GE Healthcare) | **0.2** | 400 | µM |
| *Bacteroidales* Primer Mix* | **5** | 200 | nM each |
| BSA (30 mg/mL) | **2.5** | 1.5 | µg/µL |
| AmpliTaq Gold (Life Technologies) | **0.5** | 2.5 | Units/rxn |
| Uracil DNA glycosylase (UNG; Life Technologies) | **0.25** | 0.5 | Units/rxn |

*See marker specific mastermix

***Bacteroidales* Marker Sequences**

| Marker Name | Sequence | Reference |
|---|---|---|
| **General Marker | BAC708R 5'CAATCGGAGTTCTTCGTG | Bernhard and Field, 2000 |
| General Marker (GenBac) | Bac32F 5' AACGCTAGCTACAGGCTT | Bernhard and Field, 2000 |
| Human Marker | HF183F 5' ATCATGAGTTCACATGTCCG | Bernhard and Field, 2000b |
| Hog/Pig Marker | PF163F 5' GCGGATTAATACCGTATGA | Dick et al., 2005 |
| Ruminant Marker | CF128F 5' CCAACYTTCCCGWTACTC | Bernhard and Field, 2000b |

**This primer will be used in all reactions

1. Dispense 45 µl of Master Mix for each sample into the appropriate well of PCR plate.

2. Briefly vortex DNA extracts, quick spin, then add 5 µl to the appropriate PCR well.

3. Carefully seal plate using an adhesive PCR cover.

4. Load the plate into the thermal cycler and run under the appropriate *Bacteroidales* program with the following cycling conditions:

    a. UNG digestion 50°C for 10 min
    b. Initial denaturation at 95°C for 10 min
    c. Cycling conditions (see table for number of cycles and annealing temperature):
        i. Denaturation at 95°C for 30 sec
        ii.

| Assay | Number of Cycles | Annealing Temperature (°C) | Template Volumes |
|---|---|---|---|
| GenBac – fecal | 30 | 53 | 1 ul |
| GenBac – water | 35 | 53 | 5 ul |
| Human – fecal | 35 | 60 | 1 ul |
| Human – water | 40 | 60 | 5 ul |
| Hog – fecal | 35 | 53 | 1 ul |
| Hog – water | 40 | 53 | 5 ul |
| Ruminant – fecal | 35 | 58 | 1 ul |
| Ruminant – water | 40 | 58 | 5 ul |

        iii. Extension at 72°C for 1 min
        iv. Final Extension at 72°C for 10 min

5. Store completed reactions at -20°C until analyzed by gel electrophoresis.

## 7.3 GEL ELECTROPHORESIS

1. Prepare a 200 mL, 2% agarose gel using a 500 mL bottle. Add 200 mL of 1 X TBE buffer and 4.0 g agarose. Microwave until agarose is fully dissolved, add 10 µl of ethidium bromide (10 mg/ml), tighten cap, swirl to mix and let cool 1-2 minutes.

2. Pour agarose into casting tray with one or two 30-tooth, 0.75 mm thick combs.

3. Allow gel to solidify for 30-60 minutes on the bench, remove comb(s), and place in gel tank with TBE buffer. Discard TBE in gel tank after it has been used twice.

4. Mix 10 µl of PCR product with 2 µl of 6X Loading Buffer.

5. Load the gel, starting with 10 µl of 50 bp ladder in the first lane, followed by 12 µl of each sample with Loading Buffer, and 10 µl of 50 bp ladder after the last sample.

6. Start electrophoresis power supply set at 100 volts, run for 1.5 hours.

7. Follow Gel Imager SOP for image capture. Save digital photograph as an 8-bit TIFF file with no scaling and print a hardcopy for notebook.

## 8.0. QUALITY ASSURANCE AND QUALITY CONTROL

A method blank (no-template control) is processed with each batch of samples.

## 9.0. REFERENCES

Bernhard, A. E., and K. G. Field. (2000). Identification of nonpoint sources of fecal pollution in coastal waters by using host-specific 16S ribosomal DNA genetic markers from fecal anaerobes. Appl Environ Microbiol 66:1587-1594.

Bernhard, A.E. and Field, K.G. (2000b) A PCR assay to discriminate human and ruminant feces on the basis of host differences in *Bacteroides-Prevotella* genes encoding 16S rRNA. Applied and Environmental Microbiology 66(10), 4571-4574.

Dick, L. K., Bernhard, A. E., Brodeur, T. J., Santo Domingo, J. W., Simpson, J. M., Walters, S. P., et al. (2005). Host distributions of uncultivated fecal *Bacteroidales* bacteria reveal genetic markers for fecal source identification. *Applied and Environmental Microbiology, 71*(6), 3184-3191.

## 10.0. REVISION HISTORY

| Revision | Date | Responsible Person | Description of Change |
|---|---|---|---|
| 1 | June 2015 | Joy Truesdale | Initial Release |
| 2 | March 2018 | Maitreyee Mukherjee | DNA Extraction Protocol |
| 3 | August 2018 | Lucas Gregory | Update UTH Lab name |

# C-8: Preprocessing of water samples for *Bacteroidales* PCR

**August 13, 2018**

**Joy Truesdale**
**University of Texas-Houston School of Public Health El Paso Regional Campus**

## PURPOSE AND APPLICABILITY

The purpose of this Standard Operating Procedure (SOP) is to establish a uniform procedure for the initial processing of water samples for archival at -80°C in preparation for future Bacterial Source Tracking analyses targeting library-independent DNA markers such as those for source-specific bacteria within the order *Bacteroidales*.

## 1.0. SUMMARY OF THE METHOD

Water samples are passed through 0.2 µm-pore size membrane filters to collect microbial biomass. Filters, with attached biomass, are then immersed in a lysis buffer solution and frozen until future analysis.

## 2.0. HEALTH AND SAFETY WARNINGS

Environmental water samples may contain pathogenic microorganisms. The analyst should treat all sources of wastewater as though each contained a chemical and/or a biological agent that could cause illness. The analyst should wear protective gloves and handle containers with care.

## 3.0. INTERFERENCES

Turbid waters may clog membrane filters before the desired volume of sample can be processed. If this occurs, filter as much water as possible (up to the desired volume) and record the amount of water filtered on bag/tube that the filter is placed into and also on the chain-of-custody form.

## 4.0. PERSONNEL QUALIFICATIONS

This SOP is written for persons with a basic knowledge of laboratory and microbiological procedures.

## 5.0. EQUIPMENT AND SUPPLIES

5.1 Pipets (sterile), T.D. bacteriological, plastic, of appropriate volume
5.2 Sterile membrane filtration units (filter base and funnel), glass, plastic or stainless steel, wrapped with aluminum foil or kraft paper
5.3 Line vacuum, electric vacuum pump, or aspirator for use as a vacuum source (In an emergency or in the field, a hand pump or a syringe equipped with a check valve to prevent the return flow of air, can be used)
5.4 Filter flask, vacuum, usually 1 L, with appropriate tubing

5.5 Filter manifold to hold a number of filter bases (optional)
5.6 Flask for safety trap/filter placed between the filter flask and the vacuum source
5.7 Forceps, straight or curved, with smooth tips to handle filters without damage
5.8 Ethanol, methanol or isopropanol in a small, wide-mouth container, and cigarette lighter for flame-sterilizing forceps
5.9 Burner, Bunsen or Fisher type, or electric incinerator unit for sterilizing loops
5.10 Supor membrane filters, 0.2 µm pore size, sterile, white, 47 mm diameter (VWR cat # 28147-979)
5.11 Sterile, 15 ml polypropylene centrifuge tubes, Whirl-Pak® bags, or equivalent
5.12 Freezer (-80°C)

## 6.0. PROCEDURAL STEPS

6.1 Within six hours of sample collection, water samples (100 ml) are filtered through 0.2 µm pore size Supor-200 filters
6.2 Discard filtrate and place the filter into a pre-labeled sterile 15 ml tube (or bag) using ethanol-flamed forceps and aseptic technique. If 100 ml of water cannot be filtered, record the volume filtered on the 15 ml tube and chain of custody form
6.3 Store samples at -80°C

## 7.0. QUALITY ASSURANCE AND QUALITY CONTROL

A method blank (sterile water or phosphate-buffered saline (PBS)) is processed with each batch of samples.

## 8.0. REFERENCES

Bernhard, A.E. and Field, K.G. (2000) A PCR assay to discriminate human and ruminant feces on the basis of host differences in *Bacteroides-Prevotella* genes encoding 16S rRNA. Applied and Environmental Microbiology 66(10), 4571-4574.

## 9.0. REVISION HISTORY

| Revision | Date | Responsible Person | Description of Change |
|---|---|---|---|
| 1 | June 2015 | Joy Truesdale | Initial Release |
| 2 | March 2018 | Maitreyee Mukherjee | Removing the use of guanidine isothiocyanate (GITC) as per the new DNA extraction method (SOP TXBST-07-revision 2) |
| 3 | August 2018 | Lucas Gregory | Update UTH Lab name |

# APPENDIX D: Data Review Checklist & Data Summary Sheet

**Data Review Checklist**

**Title of associated QAPP:** _____

**√, X, or N/A**

**Data Format and Structure**

A. Are there any duplicate *Tag ID* numbers? _____
B. Are the *Tag prefixes* correct? _____
C. Are all *Tag ID* numbers 7 characters? _____
D. Are TCEQ station location (SLOC) numbers assigned? _____
E. Are sampling *Dates* in the correct format, MM/DD/YYYY? _____
F. Is the sampling *Time* based on the 24-hour clock (e.g. 13:04)? _____
G. Is the *Comment* field filled in where appropriate (e.g. unusual occurrence, sampling problems, unrepresentative of ambient water quality) and any punctuation deleted? _____
H. *Source Code 1, 2* and *Program Code* are valid and used correctly? _____
I. Is the sampling date in the *Results* file the same as the one in the *Events* file? _____
J. Values represented by a valid parameter (*STORET*) code with the correct units and leading zeros? _____
K. Are there any duplicate parameter codes for the same *Tag Id*? _____
L. Are there any invalid symbols in the Greater Than/Less Than (*GT/LT*) field? _____
M. Are there any tag numbers in the *Results* file that are not in the *Events* file? _____
N. Have confirmed outliers been identified? (with a ■1" in the Verify_flg field) _____
O. Have grab data (bacteria, for example) taken during 24-hr events been reported separately as RT samples? _____
P. Is the file in the correct format (ASCII pipe-delimited text)? _____

**Data Quality Review**

A. Are all the values reported at or below the AWRL? _____
B. Have the outliers been verified? _____
C. Checks on correctness of analysis or data reasonableness performed?
   e.g.: Is ortho-phosphorus less than total phosphorus?
   Are dissolved metal concentrations less than or equal to total metals? _____
D. Have at least 10% of the data in the data set been reviewed against the field and laboratory data sheets? _____
E. Are all parameter codes in the data set listed in the QAPP? _____
F. Are all stations in the data set listed in the QAPP? _____

**Documentation Review**

A. Are blank results acceptable as specified in the QAPP? _____
B. Were control charts used to determine the acceptability of field duplicates? _____
C. Was documentation of any unusual occurrences that may affect water quality included in the Event file Comments field? _____
D. Were there any failures in sampling methods and/or deviations from sample design requirements that resulted in unreportable data? If yes, explain on next page. _____
E. Were there any failures in field and laboratory measurement systems that were not resolvable and resulted in unreportable data? If yes, explain on next page. _____

**√ = Yes** **X = No** **N/A** = Not applicable

Describe any data reporting inconsistencies with AWRL specifications. Explain failures in sampling methods and field and laboratory measurement systems that resulted in data that could not be reported to the TCEQ. (attach another page if necessary):

_____

_____

_____

_____

_____

Date Submitted to TCEQ: _____
Tag ID Series: _____
Date Range: _____
Data Source: _____
Comments (attach README.TXT file if applicable):

_____

_____

_____

_____

**Planning Agency's Data Manager Signature:** _____

**Date:** _____