Texas Cooperative EXTENSION
The Texas A&M University System

B-6196
01/07

Saqib Mukhtar,
Kevin Wagner
and Lucas Gregory*

Technologies for Reducing Nutrients in Dairy Effluent

Two new technologies—a dewatering system and an electrocoagulation system—have proven effective in removing phosphorus and other constituents from the effluent being stored and treated in dairy lagoons.

The technologies vary in cost, mode of operation and effectiveness in removing contaminants. Case studies to evaluate these two systems were conducted by Texas Cooperative Extension and the Texas Water Resources Institute.

In recent years, Texas dairies have been seeking ways to meet new, higher standards set by the state for water quality. The standards were raised to address pollution of the Bosque River, which has been compromised by excessive nutrients and aquatic plant growth in two river segments. One of the major sources of these problems is phosphorus runoff from fields where manure is applied.

To address the problems, the Texas Commission on Environmental Quality and the Texas State Soil and Water Conservation Board set limits on the amount of phosphorus that the river can accept safely. These limits, or total maximum daily loads (TMDLs), require that annual loading and annual average soluble concentrations of phosphorus in the river be reduced by 50 percent.

To meet these new standards, phosphorus must be reduced from dairy effluent applied to waste application fields. Consequently, dairies will need to adopt new, more effective and more efficient waste management practices.

Case studies were conducted on a Geotube® dewatering system and an electrocoagulation system. The research demonstrated that the systems can remove phosphorus and other constituents from the effluent being stored and treated in dairy lagoons.

*Associate Professor and Extension Agricultural Engineer, The Texas A&M University System; and Project Managers, Texas Water Resources Institute

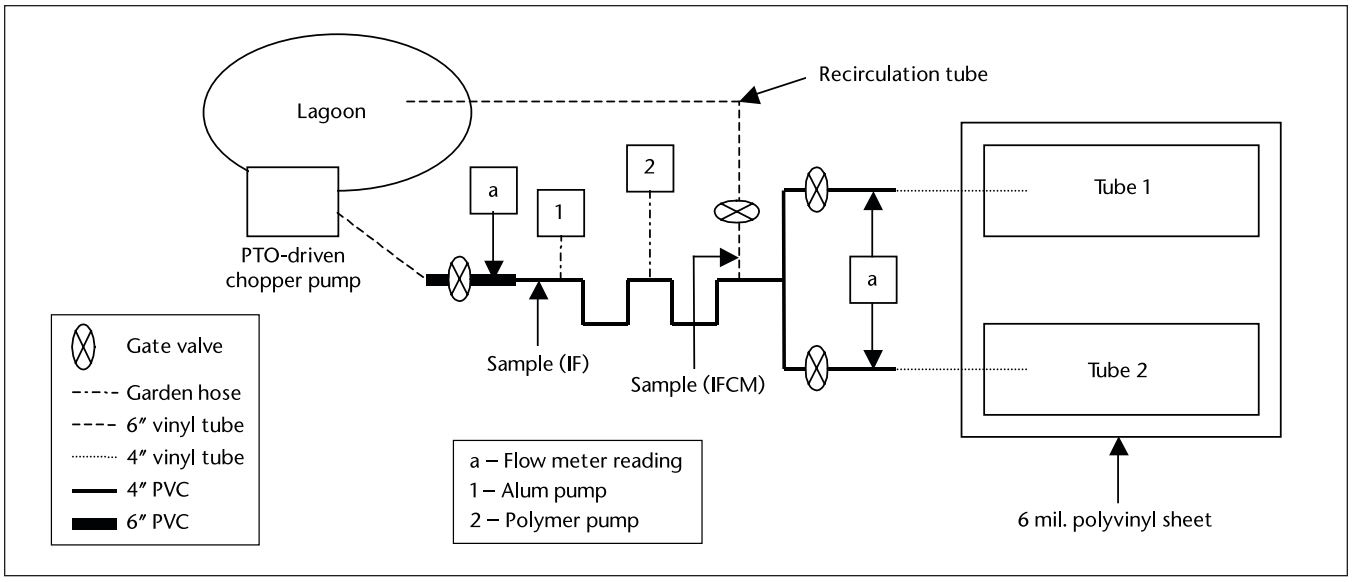

Figure. 1: Geotube® dewatering system schematic (not to scale).

Case study I: Geotube® dewatering system

The Geotube® dewatering system was demonstrated by Miratech Division of Ten Cate Nicolon and General Chemical Corporation. The technology (Fig. 1) uses large, porous tubes made of heavy-duty synthetic fabric.

In this system:

1. Alum and a polymer are added to bind and precipitate (separate out) phosphorus in the lagoon effluent.
2. The lagoon effluent is pumped into the tubes (Fig. 2).
3. The pumping ceases and the tubes are left to dewater. The liquid leaves the porous tubes and returns to the lagoon or is used for irrigation; solids larger than the tube pore size are trapped.
4. Once the tubes are dried, the solids can be hauled off.

Figure 2: Filled Geotubes®.

Geotube® system configuration

In the study, manure from the milking parlor at the demonstration dairy was flushed into the primary lagoon. Before treatment, the lagoon was agitated using a power-takeoff (PTO)-driven chopper pump (Fig. 3) for a minimum of 2 hours. Then the well-mixed, raw effluent was pumped into the tubes.

To prevent erosion and groundwater contamination, an impervious 6-millimeter polyethylene sheet was placed under the tubes and a felt-like fabric was laid on the down gradient end of each tube.

Figure 3. Chopper pump mixing the lagoon.

Alum and Cytec polymers were first added to the raw lagoon effluent, which was then pumped at about 400 gallons per minute into the Geotubes®.

Once the Geotubes® were filled with the mixture of slurry and chemical (Fig. 2) to a height of about 5 feet, the pumping ceased and the tubes were left to dewater for 6 months. The large geotextile filtration tubes retained the solids and allowed the liquid to weep from the pores in the fabric (Fig. 4).

After the tubes were sufficiently dewatered, the residuals within the tubes (Fig. 5) were planned to be disposed of off-site.

Figure 4: Sample collection from a Geotube®.

Figure 5: Residual solids in dewatered Geotube®.

Results

The effectiveness of the Geotube® system was evaluated based on liquid samples collected on March 30, 2005, as the Geotubes® were being filled and on April 6, 2005, after filling was completed (Fig. 4). Residual solids samples were collected October 3, 2005 (Fig. 5). The results should be considered a snapshot of the performance of this system at the time of the sampling events.

Concentrations of the liquid (mixed lagoon slurry) that were analyzed varied little between the two sampling events, indicating that the chopper pump effectively mixed the influent from the lagoon as it was pumped into the system.

However, the average concentrations of nutrients and metals in the effluent from the tubes varied substantially from one sampling event to the other. It is possible that the amounts of these substances in the effluent fluctuated as the tubes continued to dewater for 6 months after the second pumping event.

Results from the three sampling events showed that the Geotube® dewatering system was highly effective in reducing phosphorus from dairy lagoon effluent (Table 1). The average separation efficiencies for soluble phosphorus and total phosphorus were 88 percent and 97 percent respectively, well above the 50-percent reduction goal set by the TMDLs.

This system was also successful in filtering solids from the lagoon effluent, as indicated by the 95 percent separation efficiency observed for

Parameter	Separation efficiency
Solids	
• Total solids (TS)	95%
• Total fixed solids (TFS)	91%
Nutrients	
• Soluble phosphorus (SP)	88%
• Total phosphorus (TP)	97%
• Total Kjeldahl nitrogen (TKN)	85%
• Potassium (K)	48%
Metals	
• Calcium (Ca)	91%
• Magnesium (Mg)	65%
• Sodium (Na)	26%
• Manganese (Mn)	94%
• Iron (Fe)	99%
• Copper (Cu)	99%

Table 1: Separation efficiency for measured effluent constituents treated by the Geotube® dewatering system.

total solids. The separation efficiency (Table 1) for most of the samples analyzed was very high, indicating that the Geotube® dewatering system was effective in reducing solids, most nutrients and metals in the dairy lagoon effluent.

Table 1 shows that the system effectively removed very high percentages of soluble phosphorus, total phosphorus and total Kjeldahl nitrogen (the amount of organic and ammoniacal nitrogen in a body of water). The reduction of soluble phosphorus was attributed to the addition of the positively charged aluminum in alum binding to the negatively charged ortho-phosphorus (soluble phosphorus), rendering most of it insoluble.

Substantial reductions were also seen for calcium, manganese, iron and copper. However, because of the high solubility of potassium, the system was only moderately successful in removing it, with less than 50 percent being removed.

This system was ineffective in reducing sodium from the dairy lagoon effluent and only moderately effective in removing magnesium. However, for all other metals tested, the Geotubes® functioned as an effective filter.

Economics

The Geotubes® dewatering system vender estimated that ten 45-foot-by-232-foot Geotubes® used in conjunction with 15,000 gallons of alum and 600 gallons of polymer will treat an estimated 1.9 million gallons of effluent from this lagoon. Costs were estimated to be $90,000, or 4.7 cents per gallon, to dewater and contain nutrients of a well-mixed slurry contained in the Geotubes® from a more than 15-year-old primary lagoon.

If consideration is allowed for costs per year (total cost divided by years' worth of nutrients: $90,000 ÷ 15 years), the real costs amount to about $6,000 per year, or $3 per cow per year for this 2,000-head dairy.

This cost estimate did not include residual solids removal and will vary depending on the size of the dairy and number of cows. Economics of this technology will also vary according to the frequency of lagoon cleanout. More frequent cleanouts will increase the costs per cow.

In comparison to this lagoon treatment cost of 4.7 cents per gallon, a 1999 survey of custom manure applicators in North Carolina revealed a charge of 1.5 to 5 cents to remove 1 gallon of lagoon sludge. This wide range in cost resulted from size and accessibility of lagoon, distance to the sludge application site and sludge application method such as surface application or injection.

Conclusions

Results from the three sampling events showed that the Geotube® dewatering system was highly effective in reducing phosphorus from dairy lagoon effluent and that the Geotube® was an effective method of lagoon cleanout.

The average separation efficiencies for soluble phosphorus (88 percent) and total phosphorus (97 percent) were well above the goal of 50 percent reduction set by the TMDLs. This system was also successful in filtering total solids from the lagoon effluent, with 95 percent separation efficiency.

Although the Geotube® system was effective in removing phosphorus and other constituents from the dairy lagoon effluent, it was not an optimized system and must be optimized before it can be implemented as a best management practice for control of animal waste pollution. To optimize the system, accurate flow rates of lagoon effluent and amounts of alum and polymer to treat this effluent must be determined and maintained.

Remaining issues

An issue for this system was maintaining a constant flow rate. Because gate valves were used to control flow, solids in the lagoon clogged the valves over time, steadily reducing the flow of effluent to the tubes. As a result, the valves often had to be opened completely and then readjusted for the desired flow rate. This problem could be solved by modifying the type of valves used or controlling the flow rate using a variable speed pump.

Another issue associated with the use of Geotubes® is the disposal of residual solids. Because of rising shipping costs, it could be difficult and potentially costly to dispose of this byproduct. Commercial composters may be willing to buy these solids and defray some of the associated costs.

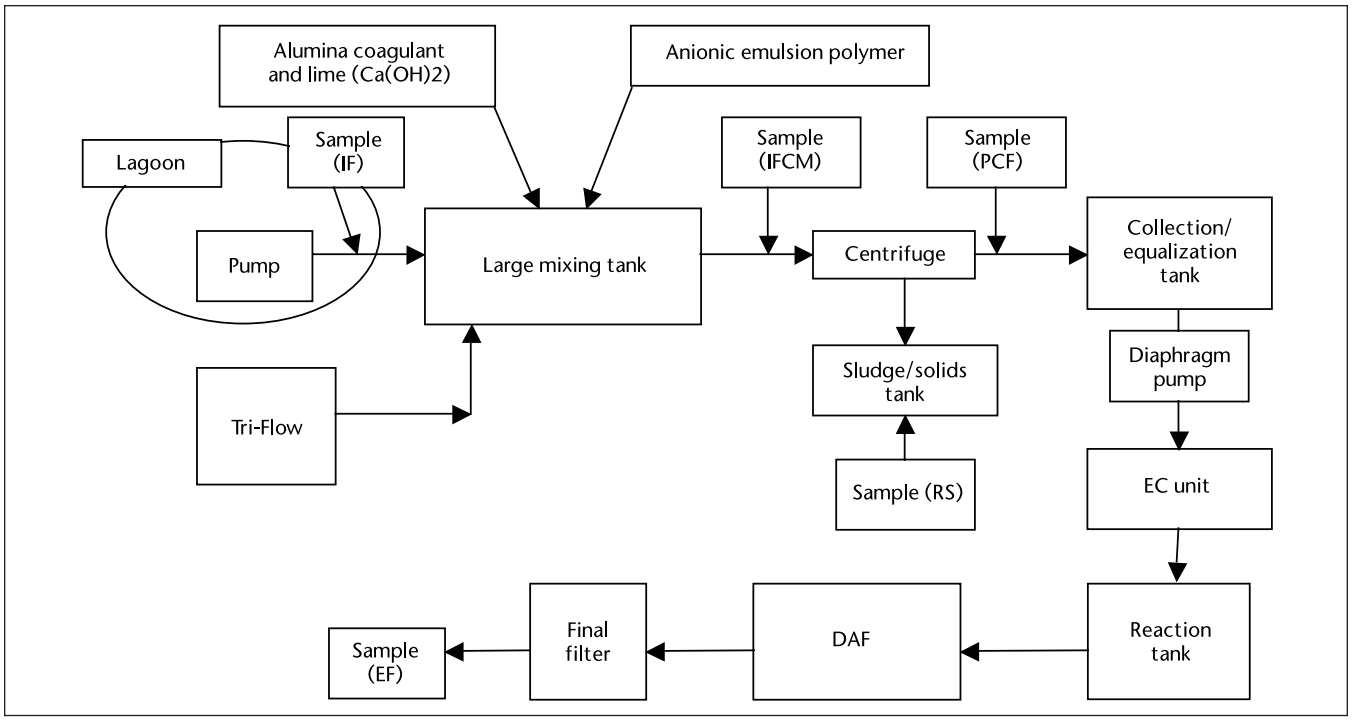

Figure 6: Schematic of EC system's component configuration for July 7 through August 2, 2005.

Case study II : Electrocoagulation system

The electrocoagulation (EC) system was demonstrated by Ecoloclean Industries, Inc. This system uses a series of devices and chemical pretreatment to separate nutrients and metals from dairy lagoon effluent (Fig. 6).

The focal point of the system is the EC unit. It contains positively charged electrodes that separate the negatively charged phosphorus and other metals from the liquid as it flows over the electrodes (Fig. 7).

In this system, influent undergoes chemical pretreatment in a mixing tank and then passes through a centrifuge, a collection/equalization tank, an EC unit, a reaction tank, a dissolved air flotation unit and then a final filter. The influent is also treated in a poly feed tank with mixer and two clarifier tanks.

EC system configuration

During the first sampling events, many modifications were made to the system configuration as Ecoloclean tried to optimize its system. The optimized system is shown in Figure 6.

Figure 7: EC unit with iron electrodes built on a filter press frame.

In the study, influent from the lagoon was pumped into a large mixing tank, where it was mixed with alum and an anionic emulsion polymer (Fig. 8) to help coagulate and separate the solids.

After chemical pretreatment, the influent was sent from the mixing tank to a centrifuge, which separated the solids and some metals from the liquid in the influent. From there, the liquid passed through a collection/equalization tank and on to the EC unit.

Figure 8: Mixing tank with chemical additions.

In the EC unit, the liquid was passed over charged electrodes that gave off ions, causing the phosphorus and metals to coagulate and precipitate (separate).

The liquid then moved to a reaction tank with a mixer that allowed sufficient time for chemical reactions to occur. A pump then moved the liquid to a dissolved air flotation (DAF) unit, which introduced small air bubbles that attached to suspended solids and floated them to the surface. Solids were then skimmed from the surface.

After leaving the bottom of the DAF unit, the liquid was passed through the final filter, which further removed impurities from the liquid and yielded the final treated effluent.

Other system components that were used at least once but then removed were a poly feed tank with mixer, where flocculant (a chemical used to aggregate or lump together small particles) was mixed with the solids precipitated by the EC unit to facilitate settling, and two clarifier tanks, where the coagulated solids were allowed to settle.

Results

The EC system performance was tested in six sampling events beginning June 8 and ending August 8, 2005. Ten sets of 15 samples (250 milliliters each) were taken during each sampling event. Because of system setup changes, the sampling amounts and locations were inconsistent until the third sampling event. From then on, 10 sets of samples were taken:

- 2 sample sets of lagoon effluent
- 2 sample sets of mixture leaving the large mixing tank
- 2 sample sets of liquid leaving the centrifuge
- 2 sample sets of solids exiting the centrifuge
- 2 sample sets of system effluent

Generally, the concentrations varied among sampling events for all constituents analyzed from the influent pumped to the EC system. This may be attributed to the inlet location and the depth of the lagoon that may have varied from week to week during these sampling events. Varying inlet locations for dairy lagoon pumps are typical because the lagoon levels change and the floating pump platform moves around the lagoon.

Effluent samples of liquid leaving the centrifuge (Fig. 9) indicated that the centrifuge was the most efficient component in the system, as it removed more total solids, total fixed solids, total volatile solids, total suspended solids, calcium, magnesium, manganese and copper than did any other component in the system. Most of the nitrate-nitrite nitrogen, total Kjeldahl nitrogen, soluble phosphorus and total phosphorus were removed in the large mixing tank, where alum and the polymer were added to influent from the lagoon.

The largest decrease of potassium and sodium occurred in the section of the system where the EC unit was located, after the centrifuge. Conductivity was also lowered there. Overall, pH increased as did the concentrations of iron and aluminum.

Table 2 shows that, on average, the entire system was effective at decreasing the percentage of most effluent constituents from the inlet to the outlet of the system. The only components that showed a moderate to marked increase were total suspended solids, pH, aluminum and iron.

Figure 9: Sample collection at the centrifuge.

Parameter	Separation efficiency
Solids	
• Total solids (TS)	46%
• Total fixed solids (TFS)	29%
• Total volatile solids (TVS)	68%
• Total suspended solids (TSS)	-22%
Nutrients	
• Soluble phosphorus (SP)	99%
• Total phosphorus (TP)	96%
• Total Kjeldahl nitrogen (TKN)	51%
• Nitrate-nitrite nitrogen (NNN)	77%
• Potassium (K)	39%
Metals	
• Manganese (Mn)	25%
• Calcium (Ca)	56%
• Sodium (Na)	18%
• Magnesium (Mg)	52%
• Iron (Fe)	-1555%
• Copper (Cu)	72%
• Aluminum (Al)	-391%
Other	
• pH	-2.6%
• Conductivity	28%

Table 2: Percentage change per measured constituent from system inflow to outflow (negative percentages indicate an increase in measured values).

Increases in total suspended solids and aluminum can most likely be attributed to the addition of alum, polymer and the "mud mix" (a very fine, clay-like proprietary additive) to the system. The average increase in iron in the treated effluent is a result of the EC unit emitting ions from the iron electrodes.

The overall performance of the system effectively accomplished the TMDL goal of removing at least 50 percent of the soluble phosphorus.

Economics

Cost estimates for the operation of the EC system (Fig. 10) were about $0.12 per gallon of treated effluent. These costs include fees for system setup and operation by representatives from Ecoloclean Industries, Inc. This estimate does not include costs for residual material removal from the dairy.

The cost on a per-cow/year basis could not be estimated because of the lack of information on the total volume of effluent treated at the dairy operation.

Conclusions

Results from six sampling events show that the bulk of the solids were removed by the centrifuge. The complete system removed total phosphorus and soluble phosphorus on average by 96 percent and 99.6 percent, respectively, from the dairy lagoon effluent.

In removing metals, the performance of the entire system was sporadic—it consistently reduced only magnesium at each sampling event.

Figure 10: General layout of the EC system.

The rest of the metals had a wide range of reductions and increases with no apparent trends from event to event.

The inconsistencies in this system's performance for both metals and solids are very possibly linked to the changes made in the system's configuration and changes in the chemical pretreatment from event to event.

Remaining issues

The centrifuge was added to remove the majority of solids so that the EC unit would function properly. Without this addition, the entire system would have been much less effective.

Also, proper disposal of byproducts (solids and liquid) of the treatment system remains to be an issue with this technology.

Acknowledgments

This publication is based on work supported by the Texas State Soil and Water Conservation Board Agreement No. 03-10 under CWA Section 319 (h), Environmental Protection Agency.

Produced by Agricultural Communications, The Texas A&M University System
Extension publications can be found on the Web at: *http://tcebookstore.org*

Visit Texas Cooperative Extension at *http://texasextension.tamu.edu*

Educational programs conducted by Texas Cooperative Extension serve people of all ages regardless of socioeconomic level, race, color, sex, religion, handicap or national origin.

Issued in furtherance of Cooperative Extension Work in Agriculture and Home Economics, Acts of Congress of May 8, 1914, as amended, and June 30, 1914, in cooperation with the United States Department of Agriculture. Edward G. Smith, Director, Texas Cooperative Extension, The Texas A&M University System.
500, New